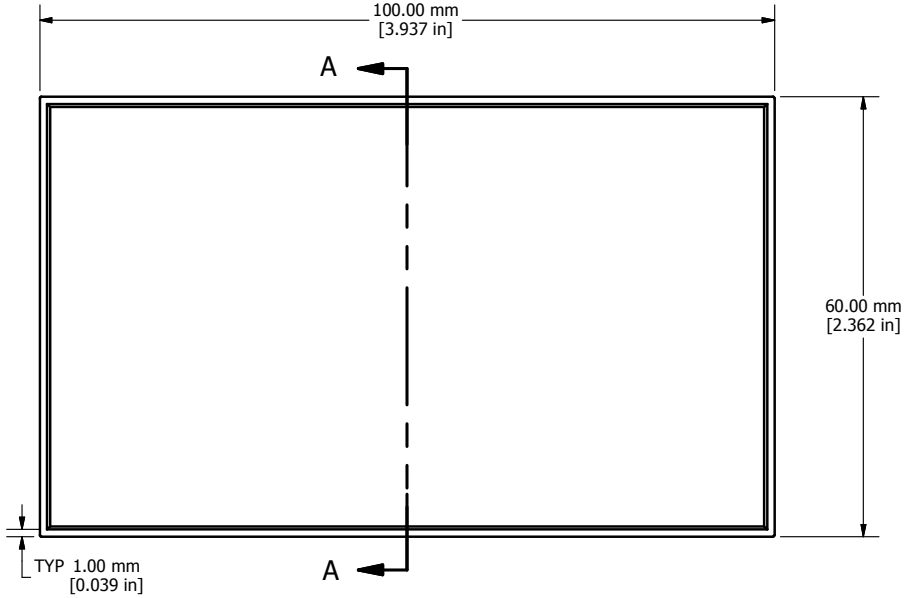

TOP VIEW

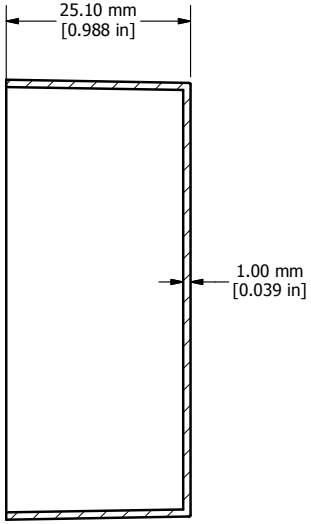

SECTION A-A

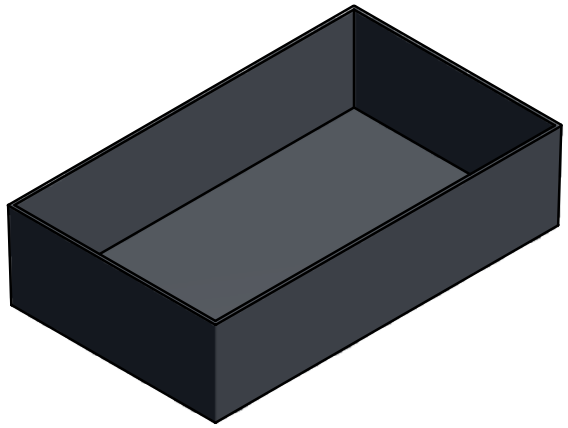

ISOMETRIC VIEW

1596B106	
Finish - Black (Smooth)	
Material - ABS Plastic	
Quantity	
1596B106	1 Box
1596B106-5	5 Boxes
1596B106-BULK	Bulk Packed

HAMMOND MANUFACTURING™

1596B106

www.hammondmfg.com