Filling valve, mechanically adjustable, series AS3-SSV

R412007246

Series AS3

The AVENTICS Series AS3 is a modular, versatile maintenance unit for universal application. This Series offers compact dimensions, is highly efficient, lightweight and easy-to-use. The AVENTICS Series AS guarantees reliability, safety, and efficiency with a simplified assembly and maintenance efforts.



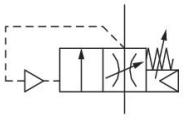

Technical data

Industry	Industrial
Activation	Pneumatically
Parts	Filling valve
Nominal flow Qn	4500 l/min
Compressed air connection	G 1/2
Min. working pressure	2.5 bar
Max. working pressure	16 bar
Sealing principle	Soft seal
Type	Poppet valve
Can be assembled into blocks	Can be assembled into blocks
Min. ambient temperature	-10 °C
Max. ambient temperature	50 °C
Medium	Compressed air Neutral gases
Max. particle size	40 µm
Compressed air connection pilot exhaust	G 3/8
Weight	0.43 kg

Filling valve, mechanically adjustable, series AS3-SSV

R412007246

Material

Housing material	Polyamide
Seal material	Acrylonitrile butadiene rubber
Material, front cover	Acrylonitrile butadiene styrene
Material threaded bushing	Die cast zinc
Part No.	R412007246

Technical information

The pressure dew point must be at least 15 °C less than ambient and medium temperature and may not exceed 3 °C.

Nominal flow Qn with secondary pressure p2 = 6 bar at Δp = 1 bar

A change in the flow direction (from air supply on the left to air supply on the right) occurs by rotating installation by 180° about the vertical axis. Please see the operating instructions for further details.

The filling valve builds up pressure slowly in the pneumatic systems, i.e. prevents a sudden pressure build-up during a recommissioning after a mains pressure failure or avoids emergency OFF switching. This allows dangerous abrupt cylinder motions to be avoided.

Do not position filling valves or filling units upstream of open consumers, such as nozzles, air barriers, air curtains, since these may prevent through connection of components.

Adjustable filling time and change-over pressure.

Filling valve, mechanically adjustable, series AS3-SSV

R412007246

Dimensions in mm

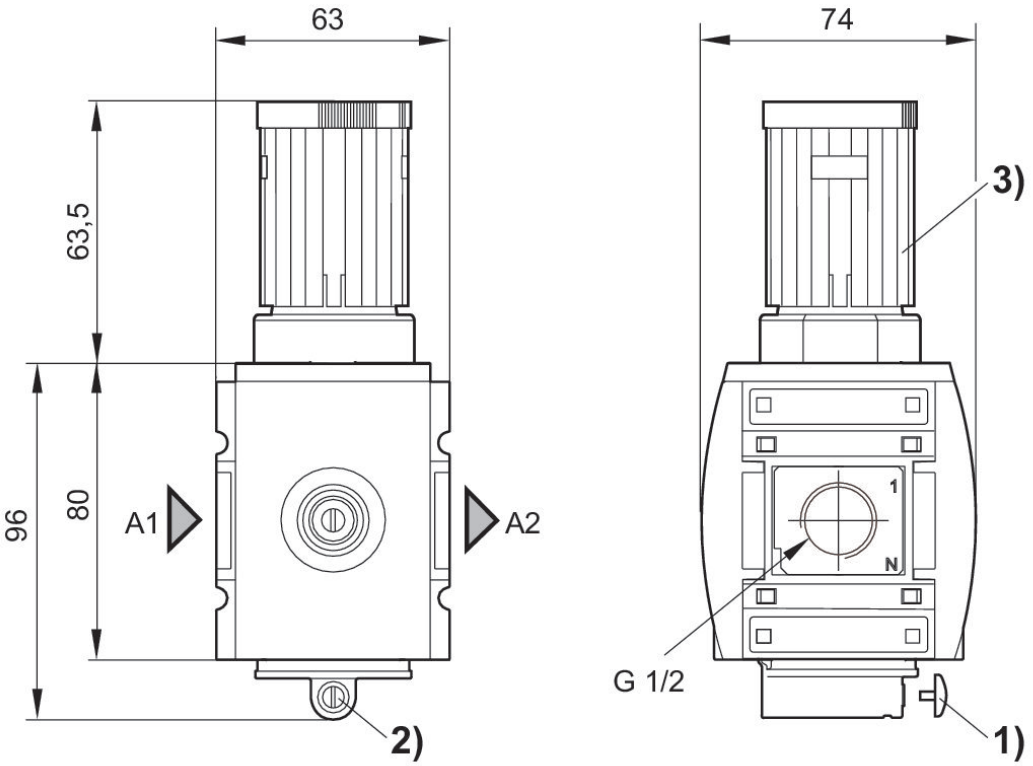

A1 = input
A2 = output
1) Adjustment screw lock
2) Adjustment screw for filling time
3) hand wheel for change-over pressure, lockable

Flow rate characteristic, p2 = 0,05 - 7 bar

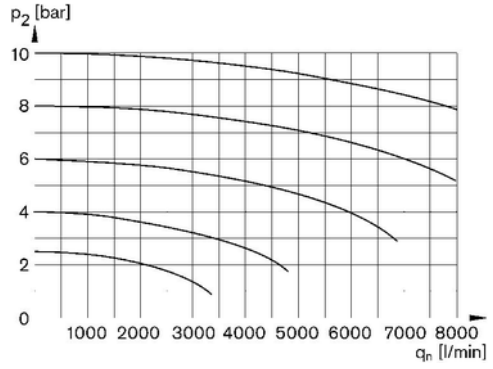

p2 = Secondary pressure
qn = Nominal flow

Secondary pressure while filling

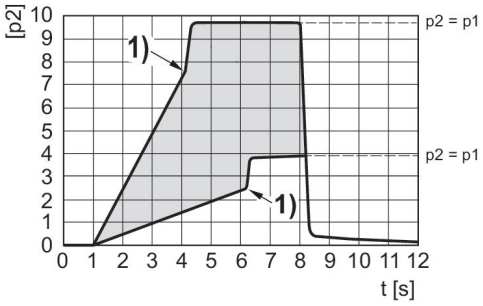

p1 = Working pressure
p2 = Secondary pressure
t = filling time, adjustable via adjustment screw (throttle)
Change-over pressure individually adjustable via handwheel
1) Switching point: adjustable filling time and change-over pressure

Filling valve, mechanically adjustable, series AS3-SSV

R412007246

Accessories overview

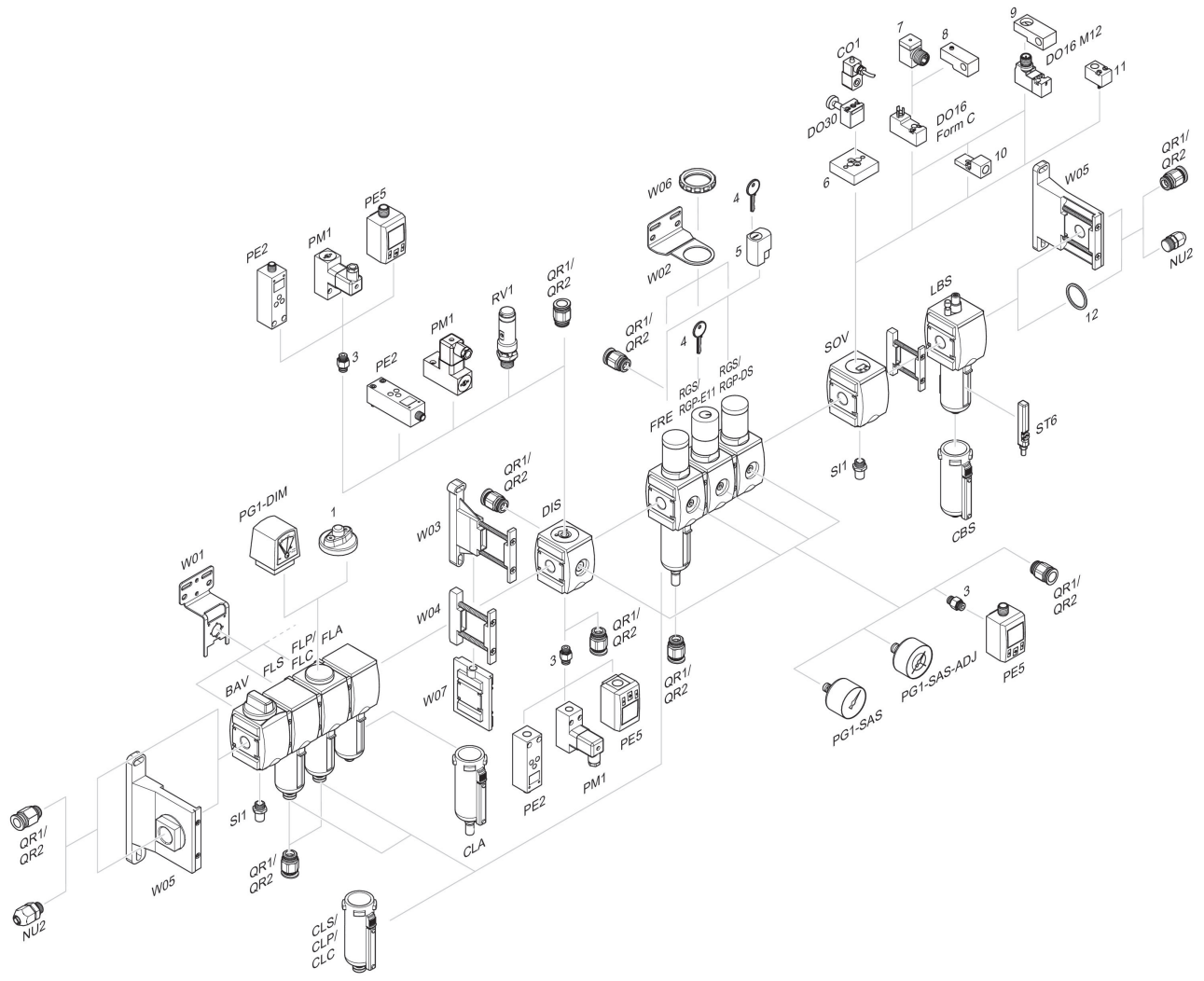

1 = contamination display 3 = Double nipple 4 = Key for E11 locking 5 = mortise lock 6 = Transition plate DO30 7 = Adapter, Series CON-VP 8 = Mounting aid DO16, form C 9 = Mounting aid DO16, M12 10 = Adapter for external pilot air 11 = Adapter pneumatic operation 12 = Sealing ring