WATERPROOF GT 53-26 PEL

Waterproof polypropylene tool case





General features

- waterproof and airtight (IP 67)
- interstackable
- corrosionproof, sandproof and dustproof
- shockproof and crushproof
- temperature rating -33°C/+90°C
- ergonomic handle, rubber coated grip
- jam free latches with user-friendly opening mechanism
- corrosion proof metal hinges with lid stay features
- pressure release valve
- special PU injected seal
- stainless steel reinforced pad lockable points providing maximum security

Internal Configuration

- document wallet
- 2 tool pallets with elastics
- 1 tool pallet with elastics (double side)
- bottom tray with removable dividers
- wheels and telescopic handle
- equipped with gas-pressurised lid supports

Versions

WATERPROOF GT 42-09 PEL
WATERPROOF GT 42-09 PTS
WATERPROOF GT 42-16 PEL
WATERPROOF GT 42-16 PTS
WATERPROOF GT 44-19 PEL
WATERPROOF GT 44-19 PSS
WATERPROOF GT 44-19 PTS
WATERPROOF GT 52-21 PEL
WATERPROOF GT 52-21 PSS
WATERPROOF GT 52-21 PTS
WATERPROOF GT 53-26 PEL
WATERPROOF GT 53-26 PTS
WATERPROOF GT 58-23

EAN

8024482180809

Technical features	A	B	C	D	E
mm internal dimensions	538	405	250	60	190
	Weight Kg 12,00				
inc internal dimensions	21 3/16	15 15/16	9 13/16	2 3/8	7 1/2
	Weight lbs 26.45				

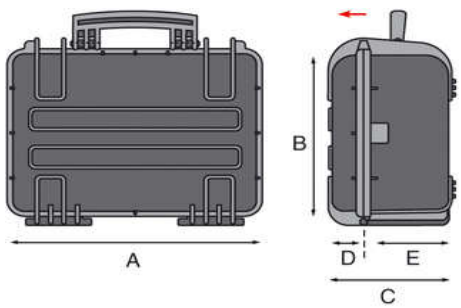

Copyright © 2022 - GT Line srl - Via del Lavoro, 9 - 40053 Loc. Crespellano Valsamoggia (Bologna) - Italy - Phone +39/051/65041 - Fax +39/051/734925
sales@gtline.com - www.gtline.com