Accessories

Series for Safety switches SLC

Description **ESCR-B-1**	Article number **6051201005**

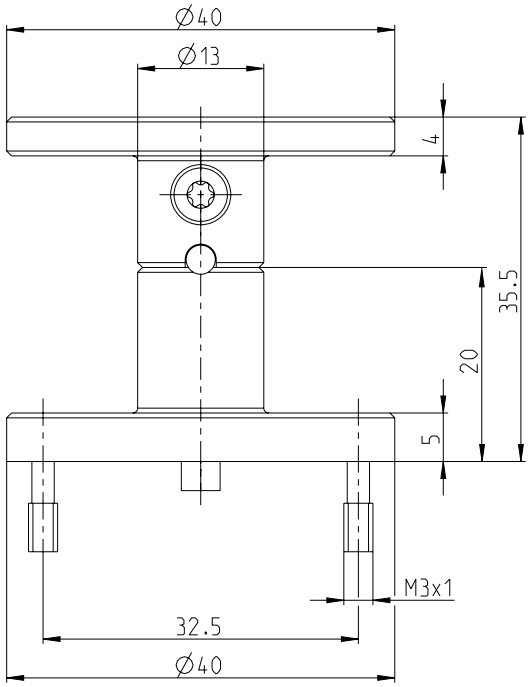

Mechanical data	
Material	Aluminium

Technical modifications and errors excepted.
The technical datasheet corresponds to the technical state as of 2019-06-26 and will not be removed in case of changes.