

Image may differ from product. See technical specification for details.

NA 49/28

Single row needle roller bearing with machined rings, with flanges

Single row needle roller bearings incorporate cylindrical rollers that are small in diameter relative to their length. Owing to their large number of rollers, the bearings have a high load carrying capacity. The outer ring includes two integral flanges to guide the bearing axially and an annular groove with one or more lubrication holes to facilitate relubrication.

- High radial load carrying capacity
- High stiffness
- Low cross-sectional height
- Accommodate axial displacement in both directions
- Separable design

Overview

Dimensions

Bore diameter	28 mm
Outside diameter	45 mm
Width	17 mm

Performance

Basic dynamic load rating	25.1 kN
Basic static load rating	37.5 kN
Reference speed	12 000 r/min
Limiting speed	14 000 r/min

Properties

Bearing part	Complete bearing
Number of rows	1
Outer ring type	Machined (solid)
Aligning feature	Without
Cage	Sheet metal
Number of flanges, outer ring	2
Radial internal clearance	CN
Tolerance class	Normal
Material, bearing	Bearing steel
Coating	Without
Sealing	Without
Lubricant	None
Relubrication feature	With

Logistics

Product net weight	0.098 kg
eClass code	23-05-09-03
UNSPSC code	31171512

Technical specification

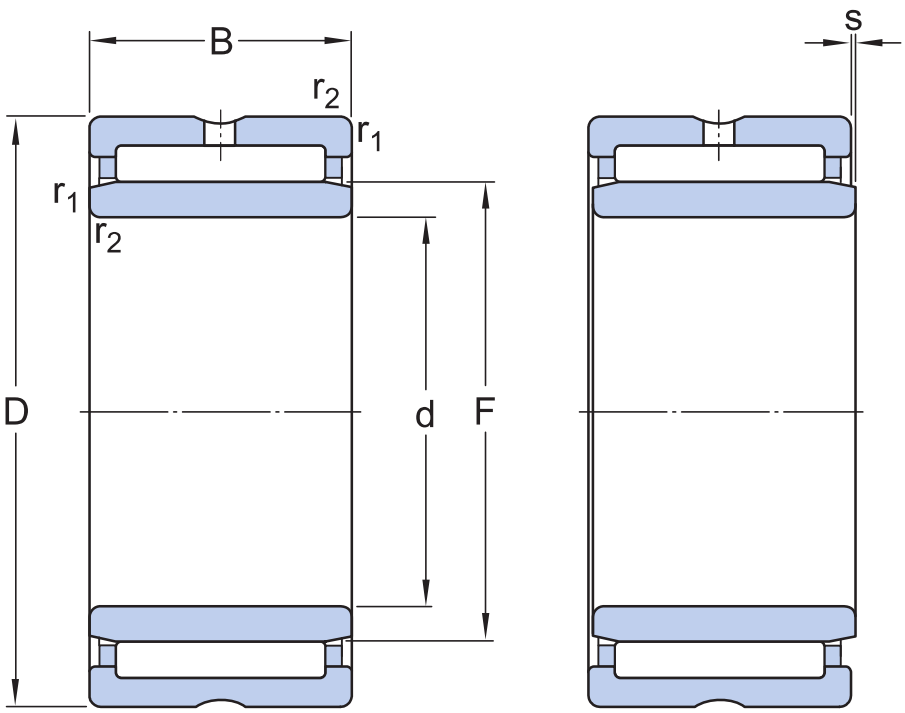

Dimensions

d	28 mm	Bore diameter
D	45 mm	Outside diameter
B	17 mm	Width
F	32 mm	Raceway diameter inner ring
$r_{1,2}$	min. 0.3 mm	Chamfer dimension outer ring
s	max. 0.8 mm	Permissible axial displacement from the normal position of one bearing ring relative to the other

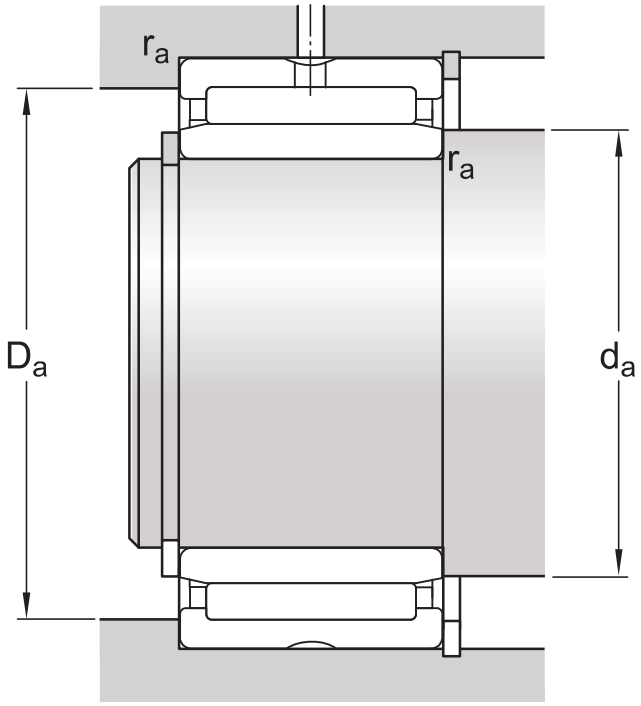

Abutment dimensions

d_a	min. 30 mm	Smallest permissible abutment diameter shaft, bearings with flanges
D_a	max. 43 mm	Diameter of housing abutment
r_a	max. 0.3 mm	Fillet radius

Calculation data

Basic dynamic load rating	C	25.1 kN
Basic static load rating	C_0	37.5 kN
Fatigue load limit	P_u	4.5 kN
Reference speed		12 000 r/min
Limiting speed		14 000 r/min

Tolerances and clearances

GENERAL BEARING SPECIFICATIONS

- Tolerances: Normal, P6, P5, ISO - F6 (F_w)
- Radial internal clearance: table

DESIGN CONSIDERATIONS

- Housing tolerances: table
- Shaft tolerances: Operating clearance

More Information

Product details

- Designs and variants
- General bearing specifications
- Loads
- Temperature limits
- Permissible speed
- Design considerations
- Designation system

Engineering information

- Principles of rolling bearing selection
- General bearing knowledge
- Bearing selection process
- Bearing failure and how to prevent it

Tools

- SimPro Quick
- Bearing Select
- Engineering Calculator
- LubeSelect for SKF greases
- Heater Selection Tool
- skf.com/mount

Terms of use

By accessing and using this website / app owned and published by AB SKF (publ.) (556007-3495 · Gothenburg) (“SKF”), you agree to the following terms and conditions:

Warranty Disclaimer and Limitation of Liability

Although every care has been taken to assure the accuracy of the information on this website / app, SKF provides this information "AS IS" and DISCLAIMS ALL WARRANTIES, EXPRESS OR IMPLIED, INCLUDING, BUT NOT LIMITED TO, IMPLIED WARRANTIES OF MERCHANTABILITY AND FITNESS FOR A PARTICULAR PURPOSE. You acknowledge that your use of this website / app is at your sole risk, that you assume full responsibility for all costs associated with use of this website / app, and that SKF shall not be liable for any direct, incidental, consequential, or indirect damages of any kind arising out of your access to, or use of the information or software made available on this website / app.

Any warranties and representations in this website / app for SKF products or services that you purchase or use will be subject to the agreed upon terms and conditions in the contract for such product or service.

Further, for non-SKF websites / apps that are referenced in our website / app or where a hyperlink appears, SKF makes no warranties concerning the accuracy or reliability of the information in these websites / apps and assumes no responsibility for material created or published by third parties contained therein. In addition, SKF does not warrant that this website / app or these other linked websites / apps are free from viruses or other harmful elements.

Third Party Services

When viewing YouTube content via the SKF website(s) (i.e. using YouTube API Services), you agree to be bound by the YouTube Terms of Service.

Copyright

Copyright in this website / app copyright of the information and software made available on this website / app rest with SKF or its licensors. All rights are reserved. All licensed material will reference the licensor that has granted SKF the right to use the material. The information and software made available on this website / app may not be reproduced, duplicated, copied, transferred, distributed, stored, modified, downloaded or otherwise exploited for any commercial use without the prior written approval of SKF. However, it may be reproduced, stored and downloaded for use by individuals without prior written approval of SKF. Under no circumstances may this information or software be supplied to third parties.

This website /app includes certain images used under license from Shutterstock, Inc.

Trademarks and Patents

All trademarks, brand names, and corporate logos displayed on the website / app are the property of SKF or its licensors, and may not be used in any way without prior written approval by SKF. All licensed trademarks published on this website / app reference the licensor that has granted SKF the right to use the trademark. Access to this website / app does not grant to the user any license under any patents owned by or licensed to SKF.

Changes

SKF reserves the right to make changes or additions to this website / app at any time.