DATASHEET - M30-PVT30



Emergency stop/emergency switching off pushbutton, RMQ-Titan, Mushroom-shaped, Turn-to-release function

Part no. M30-PVT30
Catalog No. 197544

Delivery program

Product range			RMQ-Titan
Basic function			Controlled stop pushbuttons/emergency-stop buttons
Single unit/Complete unit			Single unit
Design			Mushroom-shaped
Diameter	∅	mm	30
Illumination			Non-illuminated
			Turn-to-release function
Description			Tamper-proof according to ISO 13850/EN 418
Colour			
Mushroom head			Red
			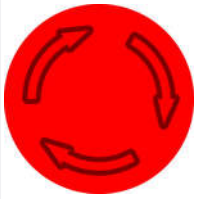
Base			yellow
Degree of Protection			IP65, IP66, IP69
Connection to SmartWire-DT			no
Actuator travel and actuation force as per DIN EN 60947-5-1, K.5.4.1			
Minimum force for positive opening	N		0
Front dimensions			35
Instructions			Max. number of contacts: four M22-(C)K01, …10 or two M22-(C)K02, …20, …11

Technical data

General

Standards			EN 50581:2012 EN 60947-5-1:2017 EN 60947-5-5:1997 + A1:2005 + A11:2013 + A2:2017 EN ISO 13850:2015 2006/42/EC Maschinenrichtlinie / machinery directive
certificate			CE, EAC UL, CSA, CCC
Lifespan, mechanical	Operations		60000
Operating frequency	Operations/h		≦ 600
Actuating force		n	≦ 50
Climatic proofing			Damp heat, constant, to IEC 60068-2-78 Damp heat, cyclic, to IEC 60068-2-30
Degree of Protection			IP65, IP66, IP69
Ambient temperature			
Open		°C	-25 - +70
Mounting position			As required
Mechanical shock resistance		g	50 Shock duration 11 ms Sinusoidal according to IEC 60068-2-27

Design verification as per IEC/EN 61439

Technical data for design verification			
Rated operational current for specified heat dissipation	I_n	A	0

Heat dissipation per pole, current-dependent	P_{vid}	W	0
Equipment heat dissipation, current-dependent	P_{vid}	W	0
Static heat dissipation, non-current-dependent	P_{vs}	W	0
Heat dissipation capacity	P_{diss}	W	0
Operating ambient temperature min.		°C	-25
Operating ambient temperature max.		°C	70
IEC/EN 61439 design verification			
10.2 Strength of materials and parts			
10.2.2 Corrosion resistance			Meets the product standard's requirements.
10.2.3.1 Verification of thermal stability of enclosures			Meets the product standard's requirements.
10.2.3.2 Verification of resistance of insulating materials to normal heat			Meets the product standard's requirements.
10.2.3.3 Verification of resistance of insulating materials to abnormal heat and fire due to internal electric effects			Meets the product standard's requirements.
10.2.4 Resistance to ultra-violet (UV) radiation			Please enquire
10.2.5 Lifting			Does not apply, since the entire switchgear needs to be evaluated.
10.2.6 Mechanical impact			Does not apply, since the entire switchgear needs to be evaluated.
10.2.7 Inscriptions			Meets the product standard's requirements.
10.3 Degree of protection of ASSEMBLIES			Does not apply, since the entire switchgear needs to be evaluated.
10.4 Clearances and creepage distances			Meets the product standard's requirements.
10.5 Protection against electric shock			Does not apply, since the entire switchgear needs to be evaluated.
10.6 Incorporation of switching devices and components			Does not apply, since the entire switchgear needs to be evaluated.
10.7 Internal electrical circuits and connections			Is the panel builder's responsibility.
10.8 Connections for external conductors			Is the panel builder's responsibility.
10.9 Insulation properties			
10.9.2 Power-frequency electric strength			Is the panel builder's responsibility.
10.9.3 Impulse withstand voltage			Is the panel builder's responsibility.
10.9.4 Testing of enclosures made of insulating material			Is the panel builder's responsibility.
10.10 Temperature rise			Not applicable.
10.11 Short-circuit rating			Is the panel builder's responsibility. The specifications for the switchgear must be observed.

Technical data ETIM 7.0

Low-voltage industrial components (EG000017) / Front element for mushroom push-button (EC001038)

Electric engineering, automation, process control engineering / Low-voltage switch technology / Command and alarm device / Front element for mushroom push-button actuators (ecl@ss10.0.1-27-37-12-12 [AKF030014])

Colour button			Red
Construction type lens			Round
Diameter cap		mm	30
Hole diameter		mm	30.5
Width opening		mm	0
Height opening		mm	0
Degree of protection (IP)			Other
Degree of protection (NEMA)			4X
Type of button			High
Suitable for illumination			No
Switching function latching			Yes
Spring-return			No
With front ring			No
Material front ring			Other
Colour front ring			Other
Suitable for emergency stop			Yes
Unlocking method			Turn-release

Approvals

North America Certification			Request filed for UL, CSA certified

Dimensions

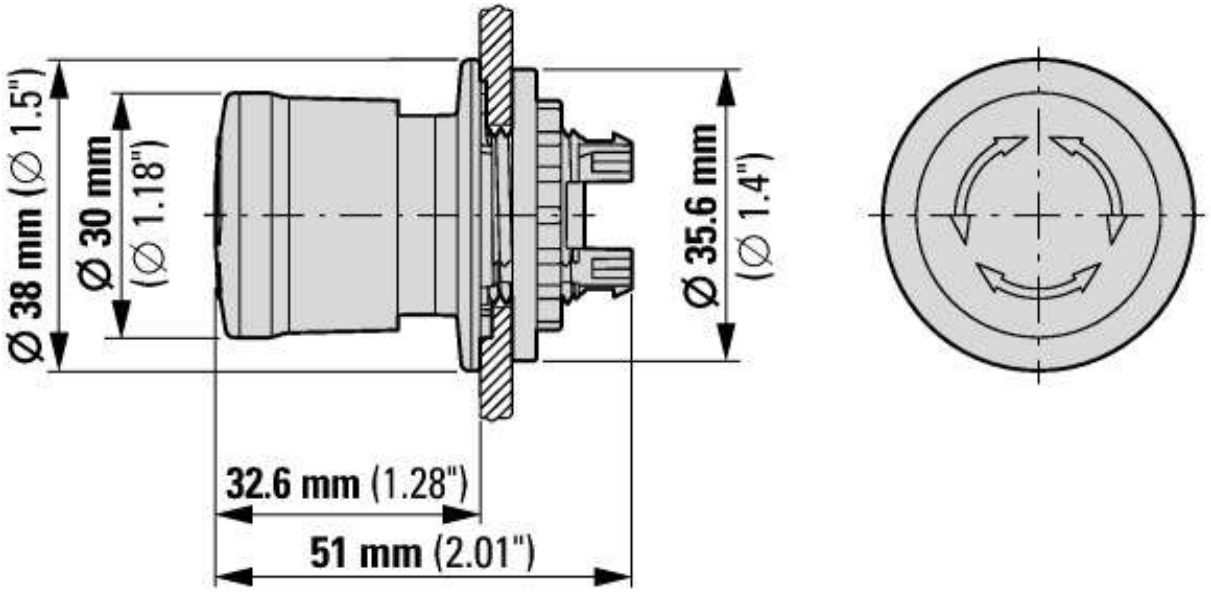

Additional product information (links)

IL04716002Z RMQ-Titan system	
IL04716002Z RMQ-Titan system	ftp://ftp.moeller.net/DOCUMENTATION/AWA_INSTRUCTIONS/IL04716002Z2018_10.pdf
DGUV Test Mark Customer Information	http://www.dguv.de/medien/dguv-test-medien/_pdf_zip_doc_ppt/agb-und-pzo/dguv_test_zeichen_infoblatt_kunden.pdf

© 05/2020 by Eaton Industries GmbH