EY3100

Adjustable angle bracket for safety light grids

ADJUSTABLE ANGLE +/- 7° SET4

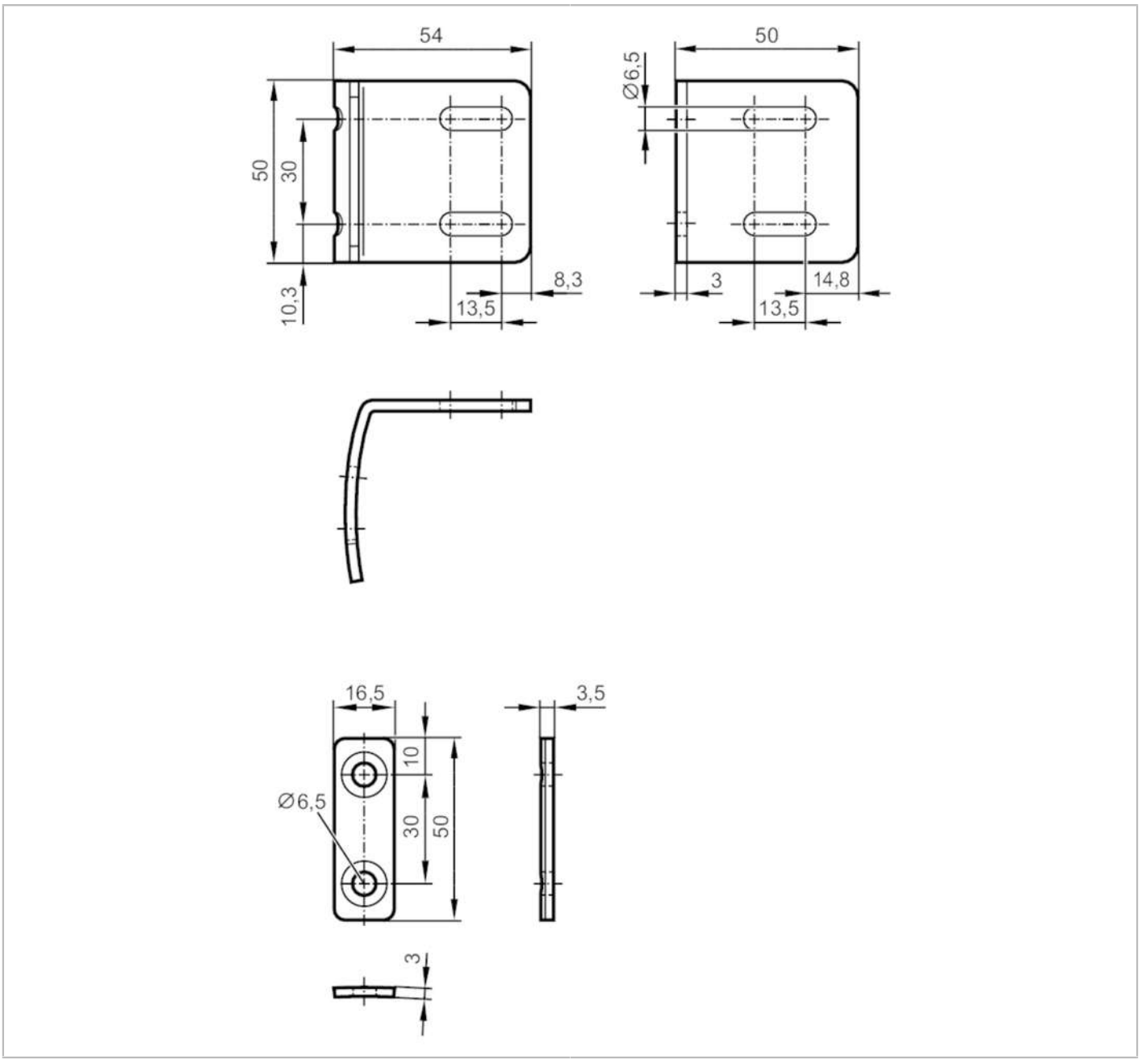

Application		
Installation		axial; (± 7°)
Mechanical data		
Weight	[g]	555
Dimensions	[mm]	50 x 54 x 50
Materials		metal galvanised
Remarks		
Pack quantity		4 pcs.