512 33-LED series

Product overview

- Current rating 100mA
- Threaded body for panel thicknesses 0.5-3.5mm, panel cut-out 6.5mm diameter
- 3.2mm LED with pin termination
- Chrome plated brass body/bezel, supplied with nut and shakeproof washer
- Red, green and amber lens colour options as standard
- Maximum working temperature 80°C

512 series



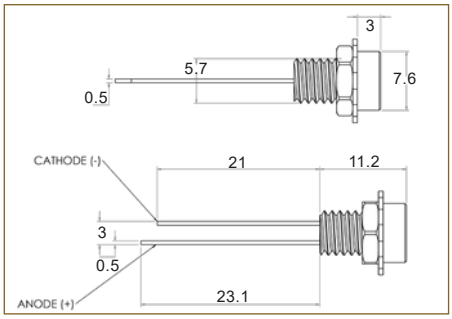

PART NO.	IND512	X	XX-	XXX-	T/	XXX
512 series indicator	512					
Lens type	1					
Pin termination	13					
LED, anode pin cut short	LED					
Transparent lens	T					
Lens colour: red	RED					
Lens colour: green	GRN					
Lens colour: amber	AMB					

E.g. IND514113-LED-T/GRN

513 34-LED series

Product overview

- Current rating 100mA
- Threaded body for panel thicknesses 0.5-3.5mm, panel cut-out 8.0mm diameter
- 5.0mm LED with pin termination
- ABS body/bezel, supplied with nut and spring washer
- Red, green and amber lens colour options as standard
- Maximum working temperature 80°C

513 series



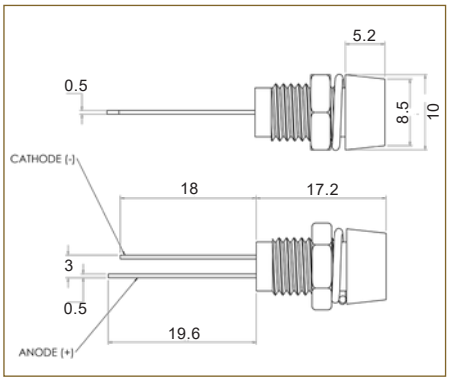

PART NO.	IND513	X	XX-	XXX-	T/	XXX
515 series indicator	513					
Lens type	1					
Pin termination	13					
LED, anode pin cut short	LED					
Transparent lens	T					
Lens colour: red	RED					
Lens colour: green	GRN					
Lens colour: amber	AMB					

E.g. IND509113-LED-T/RED

+44 (0)1638 716101 | sales@camdenboss.com | www.camdenboss.com

We operate a constant improvement policy, our products are subject to change without notice.

Vers 1

bsi ISO 9001 Quality Management Systems CERTIFIED
FM 28614