Ref: ART-B22-D70, ART-B22-D125, ART-B22-D175, ART-B22-D300

Flexible clip-around Rogowski coil for the electronic measurement of AC current with galvanic separation between the primary circuit (power) and the secondary circuit (measurement). The patented Perfect Loop Technology dramatically reduces both the error due to the position of the measured conductor within the aperture, and the error due to the proximity of external conductors.

Accuracy Class 0.5

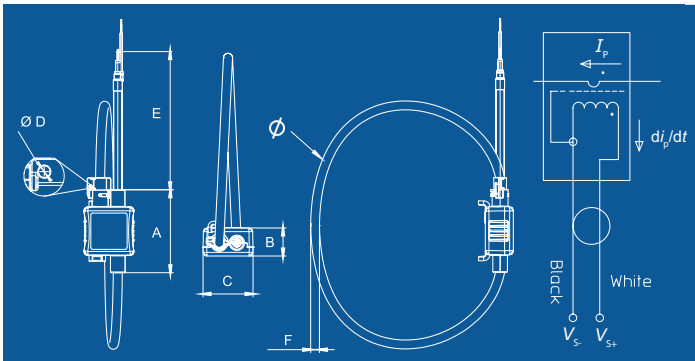



	A	B	C	D	E	F	Ø
mm	56.0	18.9	33.7	2.0	1500.0	6.1	70 - 125 175 - 300

Features

- Rated insulation voltage 1000 V Cat III PD2
- Accuracy Class 0.5 (IEC 61869-2)
- Protection degree IP57
- ⌀ 70, ⌀ 125, ⌀ 175, ⌀ 300 mm sensing aperture
- 1.5 m output cable (other lengths available see page 8)
- Ambient temperature −40 °C … +80 °C
- Very flexible and thin coil: 6.1 mm
- Slot for attaching the loop on the primary with a cable tie
- ⌀ 2 mm hole to pass a security seal tampering
- An innovative patented clasp drastically reduces the positioning error near the closing
- Internal shield for enhanced measurement accuracy at low primary currents.

Advantages

- Thin, flexible, and light weight solution
- Very low positioning error
- Quick, non-intrusive and easy setup
- A single sensor for a large current range without overload
- Less influenced by external fields
- Adaptable for a large range of cable diameters.

Applications

- MV/LV substations on LV side: Transformer Condition Monitoring
- Power metering: current measurement for active power calculation
- Building sub-metering: energy efficiency monitoring, consumption analysis and cost allocation
- Power quality monitoring: electrical loads and distribution system equipment
- Fault Detection, Isolation and Repair (FDIR): isolate the site of the fault
- Remote Terminal Units (RTU)
- Phasor Measurement Units (PMU).

Standards

- IEC 61010-1: 2010; IEC 61010-2-32: 2012
- [1] IEC 61869-1: 2007; IEC 61869-2: 2012
- [1] IEC 61869-6: 2016; IEC 61869-10: 2017
- UL 61010-1: 2012.

Note: [1] Performance standards: ART-B22 only partially fulfills these standards as a Rogowski coil has fundamental differences compared to current transformers.

LEM City answers the demand for an accurate, reliable and easy to install energy sensor for future Smart Cities.

LEMcity www.lemcity.com

Absolute maximum ratings

Parameter	Symbol	Unit	Value
Maximum secondary voltage	$U_{S\,max}$	V	30
Maximum primary conductor temperature	$T_{B\,max}$	°C	105

Stresses above these ratings may cause permanent damage.

Exposure to absolute maximum ratings for extended periods may degrade reliability.

UL 61010-1: Ratings and assumptions of certification

File # E330077 , Vol.D1

Standards

- UL 61010-1, Third Edition, May 11, 2012, Revised April 29 2016
- CAN/CSA-C22.2 No. 61010-1-12, 3rd Edition, Revision dated April 29 2016
- IEC 61010-2-032: 2012 (Third Edition), UL 61010-2-032 (IEC 61010-2-032:2012).

Ratings

Rated insulation voltage AC 1000 V, 50/60 Hz, CAT III, 2000 A.

Engineering conditions of acceptability

When installed in an end-product, consideration must be given to the following:

- ART series has been investigated as Type B current sensors according IEC 61010-2-032 3rd ed.

- The devices have been evaluated for overvoltage category III and pollution degree 2 environment use only.

For ART series, the need for the following shall be considered in the end-product:

- Markings and documentation that comply with Clause 5.

- The following tests shall be performed in the end-product evaluation: Dielectric Strength.

- The unit is considered acceptable for use in a max ambient of 80°C for ART series.

- A suitable enclosure shall be provided in the end-use application.

- The terminals have not been evaluated for field wiring.

- Primary conductor or busbar temperature should never exceed 100°C.

LEM City answers the demand for an accurate, reliable and easy to install energy sensor for future Smart Cities.
LEMcity www.lemcity.com

Insulation coordination

Parameter	Symbol	Unit	Value	Comment
RMS voltage for AC insulation test, 50 Hz, 1 min	U_d	kV	7.4	
Impulse withstand voltage 1.2/50 µs	$\hat{U}_W$	kV	12.8	
Partial discharge RMS test voltage (q_m < 10 pC)	U_t	kV	1.65	According to IEC 60664-1
Clearance (pri. - sec.)	d_{Cl}	mm	> 16	Shortest distance through air
Creepage distance (pri. - sec.)	d_{Cp}	mm	> 16	Shortest path along device body
Case material	-	-	V0	According to UL 94
CTI			600	
Application example	-		1000 V CAT III PD2	Reinforced insulation according to IEC 61010-1
Application example	-		1000 V CAT IV PD2	Basic insulation according to IEC 61010-1

Environmental and mechanical characteristics

Parameter	Symbol	Unit	Min	Typ	Max	Comment
Ambient operating temperature	T_A	°C	−40		80	
Ambient storage temperature	T_S	°C	−40		80	
Relative humidity (non-condensing)	RH	%	0		90	
Altitude above sea level		m			2000	
Mass ⌀ 70	m	g		124		Cable length: 1.5 m
Mass ⌀ 125	m	g		130		Cable length: 1.5 m
Mass ⌀ 175	m	g		138		Cable length: 1.5 m
Mass ⌀ 300	m	g		155		Cable length: 1.5 m

LEM City answers the demand for an accurate, reliable and easy to install energy sensor for future Smart Cities.

LEMcity www.lemcity.com

Electrical data ART-B22-D70

At T_A = 25 °C, R_L = 10 kΩ, unless otherwise noted.

Parameter	Symbol	Unit	Min	Value	Max	Comment
Rated primary current	I_{Pr}	A				Not applicable [1]
Rated short-time thermal current	I_{th}	kA		300		@ 50 Hz [2]
Rated transformation ratio	k_{ra}	kA/V		44.44		@ 50 Hz
Rated frequency	f_r	Hz		50/60		

Parameter	Symbol	Unit	Min	Typ	Max	Comment
Secondary voltage	U_S	mV		22.5		@ 50 Hz, I_P = 1 kA
Mutual inductance	M	nH		71.98		
Temperature coefficient of M	TCM	ppm/K		±30		
Frequency bandwidth (−3 dB)	BW	kHz		420		[3] Cable length: 1.5 m
Phase displacement [4] @ 50/60 Hz	$\Delta\varphi$	°		0.004		[3]
Coil inductance	L_S	µH		180		
Coil resistance	R_S	Ω		56		
Ratio error (centered)	ε	%	−0.5		0.5	Class 0.5 accuracy according to IEC 61869-2
Ratio error (all positions)	ε	%	−0.75		0.75	[5] Including positioning error
Linearity error	ε_L	%		None		
Influence of external current	$\varepsilon_{I\,ext}$	%	0	±0.2	±0.4	[6]

Notes:
[1] The Rogowski coil can measure any primary current as there is no saturation effect.
[2] Not tested given that in the worst case (load = 0 Ohm i.e. short circuit on the output) the peak dissipated power remains low (< 2 Watts)
[3] Frequency bandwidth and phase shift modeling schematic can be provided on request.
[4] Referring to the main phase offset of 90 ° (a Rogowski coil is a derivative current transducer)
[5] Considering a primary conductor of at least ⌀ 15 mm, perpendicular and in contact with the Rogowski coil.
[6] Considering an external conductor of at least ⌀ 15 mm the same current level than internal conductor, perpendicular and in contact with the Rogowski coil.

LEM City answers the demand for an accurate, reliable and easy to install energy sensor for future Smart Cities.

LEMcity www.lemcity.com

Electrical data ART-B22-D125

At T_A = 25 °C, R_L = 10 kΩ, unless otherwise noted.

Parameter	Symbol	Unit	Min	Value	Max	Comment
Rated primary current	I_{Pr}	A				Not applicable [1]
Rated short-time thermal current	I_{th}	kA		300		@ 50 Hz [2]
Rated transformation ratio	k_{ra}	kA/V		44.44		@ 50 Hz
Rated frequency	f_r	Hz		50/60		

Parameter	Symbol	Unit	Min	Typ	Max	Comment
Secondary voltage	U_S	mV		22.5		@ 50 Hz, I_P = 1 kA
Mutual inductance	M	nH		72.14		
Temperature coefficient of M	TCM	ppm/K		±30		
Frequency bandwidth (−3 dB)	BW	kHz		373		[3] Cable length: 1.5 m
Phase displacement [4] @ 50/60 Hz	$\Delta\varphi$	°		0.004		[3]
Coil inductance	L_S	µH		258		
Coil resistance	R_S	Ω		81		
Ratio error (centered)	ε	%	−0.5		0.5	Class 0.5 accuracy according to IEC 61869-2
Ratio error (all positions)	ε	%	−0.75		0.75	[5] Including positioning error
Linearity error	ε_L	%		None		
Influence of external current	$\varepsilon_{I\,ext}$	%	0	±0.2	±0.4	[6]

Notes:
[1] The Rogowski coil can measure any primary current as there is no saturation effect.
[2] Not tested given that in the worst case (load = 0 Ohm i.e. short circuit on the output) the peak dissipated power remains low (< 2 Watts)
[3] Frequency bandwidth and phase shift modeling schematic can be provided on request.
[4] Referring to the main phase offset of 90 ° (a Rogowski coil is a derivative current transducer)
[5] Considering a primary conductor of at least ⌀ 15 mm, perpendicular and in contact with the Rogowski coil.
[6] Considering an external conductor of at least ⌀ 15 mm the same current level than internal conductor, perpendicular and in contact with the Rogowski coil.

LEM City answers the demand for an accurate, reliable and easy to install energy sensor for future Smart Cities.

LEMcity www.lemcity.com

Electrical data ART-B22-D175

At T_A = 25 °C, R_L = 10 kΩ, unless otherwise noted.

Parameter	Symbol	Unit	Min	Value	Max	Comment
Rated primary current	I_{Pr}	A				Not applicable [1]
Rated short-time thermal current	I_{th}	kA		300		@ 50 Hz [2]
Rated transformation ratio	k_{ra}	kA/V		44.44		@ 50 Hz
Rated frequency	f_r	Hz		50/60		

Parameter	Symbol	Unit	Min	Typ	Max	Comment
Secondary voltage	U_S	mV		22.5		@ 50 Hz, I_P = 1 kA
Mutual inductance	M	nH		72.31		
Temperature coefficient of M	TCM	ppm/K		±30		
Frequency bandwidth (−3 dB)	BW	kHz		350		[3] Cable length: 1.5 m
Phase displacement [4] @ 50/60 Hz	$\Delta\varphi$	°		0.004		[3]
Coil inductance	L_S	µH		343		
Coil resistance	R_S	Ω		105		
Ratio error (centered)	ε	%	−0.5		0.5	Class 0.5 accuracy according to IEC 61869-2
Ratio error (all positions)	ε	%	−0.75		0.75	[5] Including positioning error
Linearity error	ε_L	%		None		
Influence of external current	$\varepsilon_{I\,ext}$	%	0	±0.2	±0.4	[6]

Notes:
[1] The Rogowski coil can measure any primary current as there is no saturation effect.
[2] Not tested given that in the worst case (load = 0 Ohm i.e. short circuit on the output) the peak dissipated power remains low (< 2 Watts)
[3] Frequency bandwidth and phase shift modeling schematic can be provided on request.
[4] Referring to the main phase offset of 90 ° (a Rogowski coil is a derivative current transducer)
[5] Considering a primary conductor of at least ⌀ 15 mm, perpendicular and in contact with the Rogowski coil.
[6] Considering an external conductor of at least ⌀ 15 mm the same current level than internal conductor, perpendicular and in contact with the Rogowski coil.

LEM City answers the demand for an accurate, reliable and easy to install energy sensor for future Smart Cities.

LEMcity www.lemcity.com



Electrical data ART-B22-D300

At T_A = 25 °C, R_L = 10 kΩ, unless otherwise noted.

Parameter	Symbol	Unit	Min	Value	Max	Comment
Rated primary current	I_{Pr}	A				Not applicable [1]
Rated short-time thermal current	I_{th}	kA		300		@ 50 Hz [2]
Rated transformation ratio	k_{ra}	kA/V		44.44		@ 50 Hz
Rated frequency	f_r	Hz		50/60		

Parameter	Symbol	Unit	Min	Typ	Max	Comment
Secondary voltage	U_S	mV		22.5		@ 50 Hz, I_P = 1 kA
Mutual inductance	M	nH		72.84		
Temperature coefficient of M	TCM	ppm/K		±30		
Frequency bandwidth (−3 dB)	BW	kHz		300		[3] Cable length: 1.5 m
Phase displacement [4] @ 50/60 Hz	$\Delta\varphi$	°		0.004		[3]
Coil inductance	L_S	µH		566		
Coil resistance	R_S	Ω		170		
Ratio error (centered)	ε	%	−0.5		0.5	Class 0.5 accuracy according to IEC 61869-2
Ratio error (all positions)	ε	%	−0.75		0.75	[5] Including positioning error
Linearity error	ε_L	%		None		
Influence of external current	$\varepsilon_{I\,ext}$	%	0	±0.2	±0.4	[6]

Notes:
[1] The Rogowski coil can measure any primary current as there is no saturation effect.
[2] Not tested given that in the worst case (load = 0 Ohm i.e. short circuit on the output) the peak dissipated power remains low (< 2 Watts)
[3] Frequency bandwidth and phase shift modeling schematic can be provided on request.
[4] Referring to the main phase offset of 90 ° (a Rogowski coil is a derivative current transducer)
[5] Considering a primary conductor of at least ⌀ 15 mm, perpendicular and in contact with the Rogowski coil.
[6] Considering an external conductor of at least ⌀ 15 mm the same current level than internal conductor, perpendicular and in contact with the Rogowski coil.

LEM City answers the demand for an accurate, reliable and easy to install energy sensor for future Smart Cities.

LEMcity www.lemcity.com

Definition of typical, minimum and maximum values

Minimum and maximum values for specified limiting and safety conditions have to be understood as such as well as values shown in “typical” graphs.

On the other hand, measured values are part of a statistical distribution that can be specified by an interval with upper and lower limits and a probability for measured values to lie within this interval.

Unless otherwise stated (e.g. “100 % tested”), the LEM definition for such intervals designated with “min” and “max” is that the probability for values of samples to lie in this interval is 99.73 %.

For a normal (Gaussian) distribution, this corresponds to an interval between −3 sigma and +3 sigma. If “typical” values are not obviously mean or average values, those values are defined to delimit intervals with a probability of 68.27 %, corresponding to an interval between −sigma and +sigma for a normal distribution.

Typical, minimum and maximum values are determined during the initial characterization of the product.

Accuracy class according to IEC 61869-2

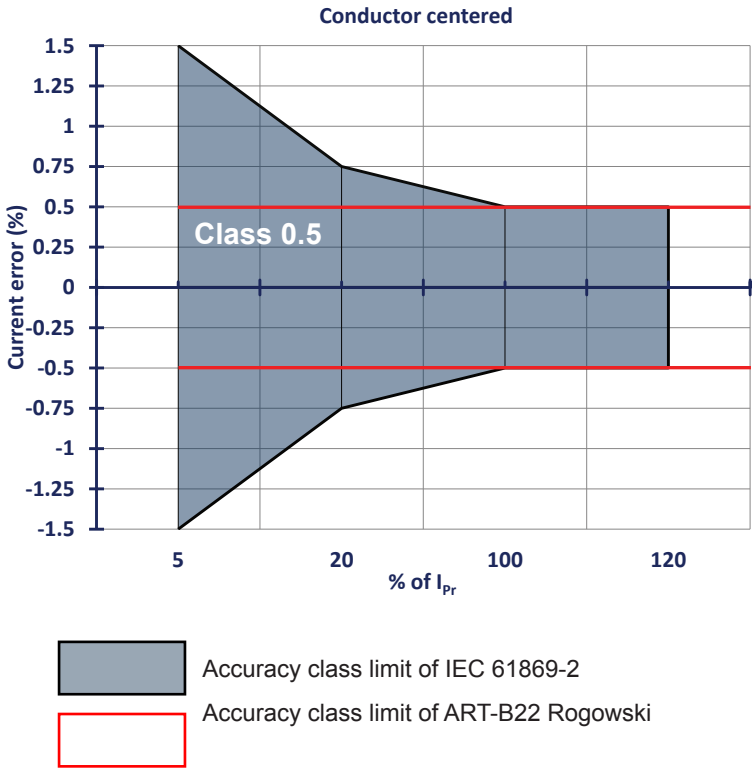

LEM City answers the demand for an accurate, reliable and easy to install energy sensor for future Smart Cities.
LEMcity www.lemcity.com

Performance parameters definition

Rated transformation ratio k_{ra}

Ratio of k_{ra} to the actual secondary voltage.

Ratio error ε

The current ratio error, expressed as a percentage, is defined by the formula:

$$\varepsilon = \frac{k_{ra}\, U_s - I_P}{I_P} \times 100\ \%$$

Where:

k_{ra}: is the rated transformation ratio
I_P: is the actual primary current
U_S: is the actual secondary voltage when I_P is flowing

Phase displacement $\Delta\varphi$

The $\Delta\varphi$ is the difference in phase between the primary current and the ideal secondary voltage phasors. The direction of the phasors being that the angle is 90 ° (leading) for an ideal Rogowski coil.

The phase displacement is said to be positive when the secondary voltage phasor leads the primary current phasor.

Linearity error ε_L

The linearity error ε_L is the maximum positive or negative difference between the measured points and the linear regression line, expressed as a percentage of I_{Pr}.

Rated short-time thermal current I_{th}

Maximum value of the primary current which the Rogowski will withstand for a specified short time without suffering harmful effects.

LEM City answers the demand for an accurate, reliable and easy to install energy sensor for future Smart Cities.
LEMcity www.lemcity.com

ART-B22-DXXX series: name and codification

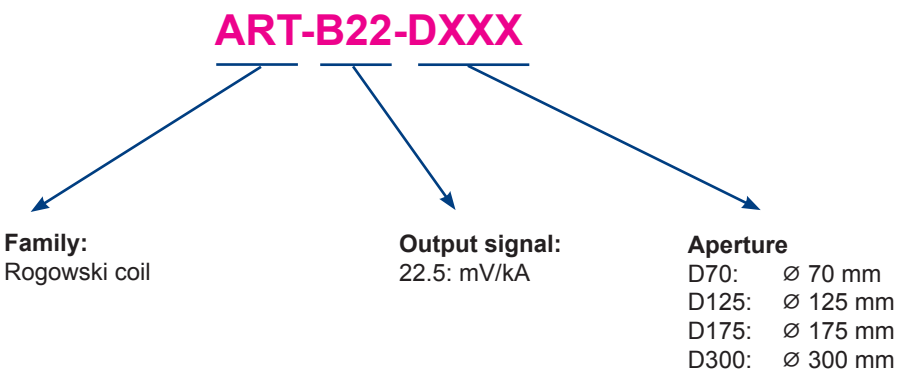

Other cable lengths available

Product name	Length (m)	Mass (g)
ART-B22-D70/SP3	3	192
ART-B22-D70/SP4	4.5	259
ART-B22-D70/SP6	6	327
ART-B22-D125/SP3	3	198
ART-B22-D125/SP4	4.5	265
ART-B22-D125/SP6	6	333
ART-B22-D175/SP3	3	206
ART-B22-D175/SP4	4.5	273
ART-B22-D175/SP6	6	341
ART-B22-D300/SP3	3	222
ART-B22-D300/SP4	4.5	290
ART-B22-D300/SP6	6	357

LEM City answers the demand for an accurate, reliable and easy to install energy sensor for future Smart Cities.
LEMcity www.lemcity.com

Safety and warning notes

In order to guarantee safe operation of the transducer and to be able to make proper use of all features and functions, please read these instructions thoroughly!
Safe operation can only be guaranteed if the transducer is used for the purpose it has been designed for and within the limits of the technical specifications.
Ensure you get up-to-date technical information that can be found in the latest associated datasheet under www.lem.com.


Caution! Risk of danger

Ignoring the warnings can lead to serious injury and/or cause damage! The electric measuring transducer may only be installed and put into operation by qualified personnel that have received an appropriate training.
The corresponding national regulations shall be observed during installation and operation of the transducer and any electrical conductor.
The transducer shall be used in electric/electronic equipment with respect to applicable standards and safety requirements and in accordance with all the related systems and components manufacturers' operating instructions.


Caution! Risk of electrical shock

When operating the transducer, certain parts of the module may carry hazardous live voltage (e.g. primary conductor). The user shall ensure to take all measures necessary to protect against electrical shock. The transducer is a build-in device containing conducting parts that shall not be accessible after installation. A protective enclosure or additional insulation barrier may be necessary. Installation and maintenance shall be done with the main power supply disconnected except if there are no hazardous live parts in or in close proximity to the system and if the applicable national regulations are fully observed.

Safe and trouble-free operation of this transducer can only be guaranteed if transport, storage and installation are carried out correctly and operation and maintenance are carried out with care.


Caution! Risk of electrical shock

Do not apply around or remove from uninsulated hazardous live conductors which may result in electric shock, electric burn or arc flash.

LEM City answers the demand for an accurate, reliable and easy to install energy sensor for future Smart Cities.
LEMcity www.lemcity.com

Dimensions (in mm)

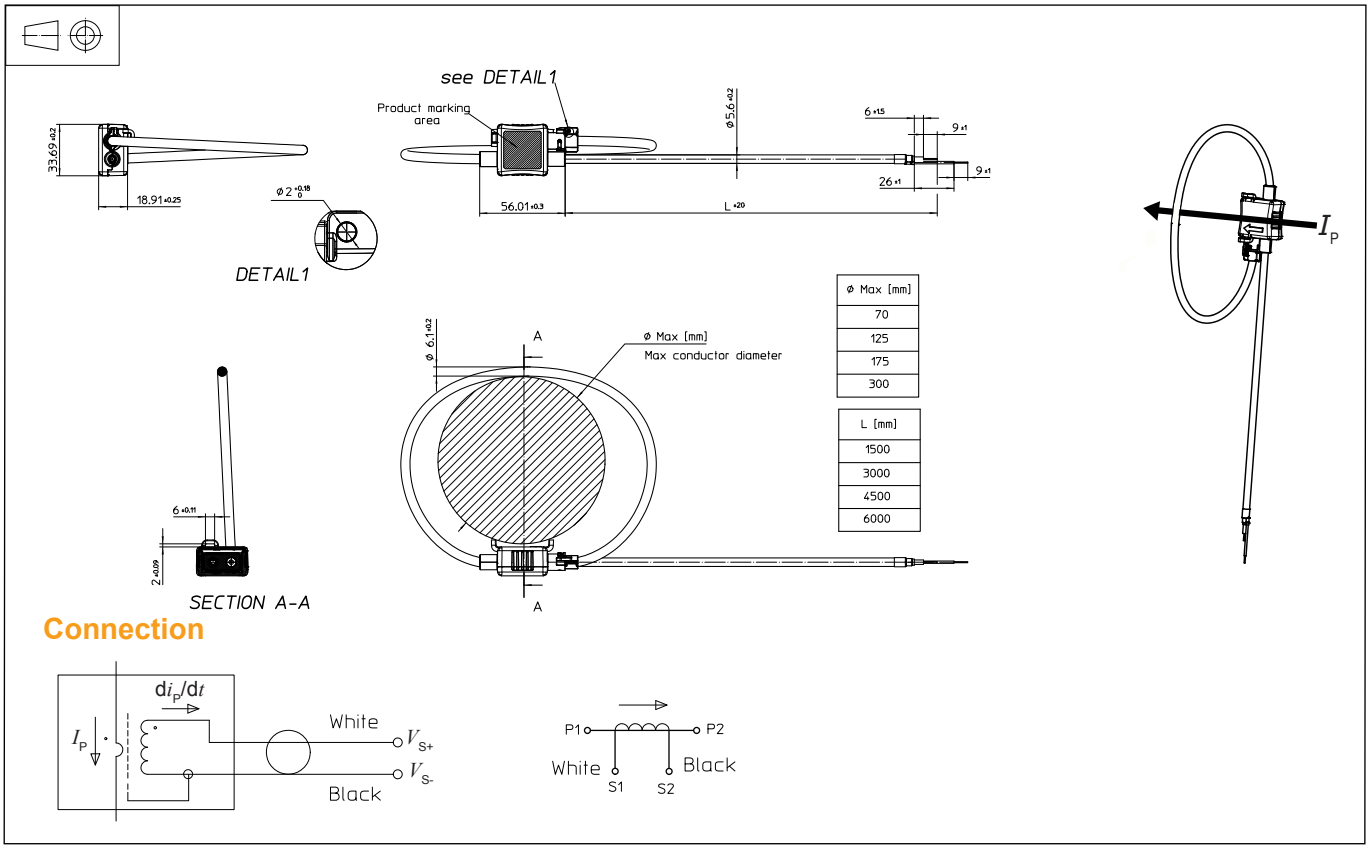

Connection

Mechanical characteristics

- General tolerance ±1 mm
- Output cable length See table page 8 or drawing above
- Termination 2 stripped wires
- Cable tie maximum effort 50 N

Remarks

- $U_S = V_{S+} - V_{S-}$ is positive when an increasing primary current di/dt flows in the direction of the arrow (see fig. 1).
- Due to low positioning error (ε_P), the device does not need to be physically fastened around the primary conductor. Should the device be secured, make sure no mechanical stress is applied to the coil itself.
- This product is not intended for outdoor use.
- Installation of the transducer must be done unless otherwise specified on the datasheet, according to LEM Transducer Generic Mounting Rules. Please refer to LEM document N°ANE120504 available on our Web site: **Products/Product Documentation.**

LEM City answers the demand for an accurate, reliable and easy to install energy sensor for future Smart Cities.

LEMcity www.lemcity.com