Ultrasonic Sensor
Diffuse Mode Sensor
RU50U-S18-AN8X

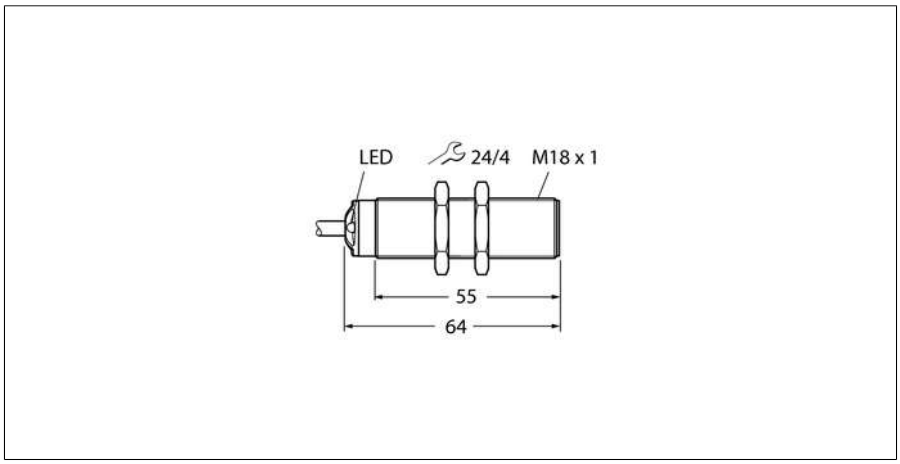

- **Smooth sonic transducer face**
- **Cylindrical housing S18, potted**
- **Connection via cable, 2 m**
- **Teach range adjustable via adapter**
- **Temperature compensation**
- **Blind zone: 5 cm**
- **Range: 50 cm**
- **Aperture angle of sonic cone: 20°**
- **NPN switching output, NO contact**
- **Switching range adjustable**

Type designation	RU50U-S18-AN8X
Ident no.	100000984
Operating mode	Ultrasonic diffuse mode sensor
Range	5…50cm
Resolution	0.5 mm
minimum switching range	5 mm
Ultrasound frequency	300 kHz
Repeat accuracy	0.15 % of full scale
Temperature drift	1.5% of full scale
Linearity error	≤ ± 0.5 %
Edge lengths of the nominal actuator	20 mm
Operating voltage	15…30 VDC
DC rated operational current	≤ 150 mA
No-load current I_0	≤ 50 mA
Residual current	≤ 0.1 mA
Response time typical	65 ms
Readiness delay	300 ms
Output function	NO contact, NPN
Output 1	Switching output
Switching frequency	9.6 Hz
Hysteresis	≤ 5 mm
Voltage drop at I_e	≤ 2.5 V
Short-circuit protection	yes/ Cyclic
Reverse polarity protection	yes
Wire breakage protection	yes
End cap	Plastic, EPTR, black
Design	Threaded barrel,S18
Radiation direction	straight
Dimensions	64 x Ø18 mm
Housing material	Plastic, LCP, Yellow
Transducer material	Plastic, Epoxy-resin
Electrical connection	Cables, 4-wire
Protection class	IP67
Ambient temperature	-20…+50 °C
Storage temperature	-40…+80 °C
Declaration of conformity EN ISO/IEC	EN 60947-5-2
Vibration resistance	IEC 60068-2-6
MTTF	281 years
Switching state	LED,Yellow

Wiring Diagram

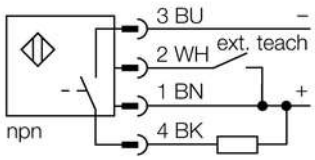

Functional principle

Ultrasonic sensors capture a multitude of objects contactlessly and wear-free with ultrasonic waves. It does not matter whether the object is transparent or opaque, metallic or non-metallic, firm, liquid or powdery. Even environmental conditions such as spray, dust or rain hardly affect their function.

The sonic cone diagram indicates the detection range of the sensor. In accordance with standard EN 60947-5-2, quadratic targets in a range of sizes (20 x 20 mm, 100 x 100 mm) and a round rod with a diameter of 27 mm are used.

Important: The detection ranges for other targets may differ from those for standard targets due to the different reflection properties and geometries.

Sonic Cone

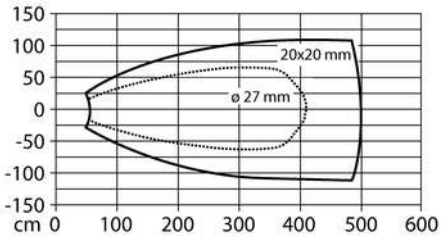

Edition • 2018-05-20T13:10:08+02:00

Ultrasonic Sensor
Diffuse Mode Sensor
RU50U-S18-AN8X

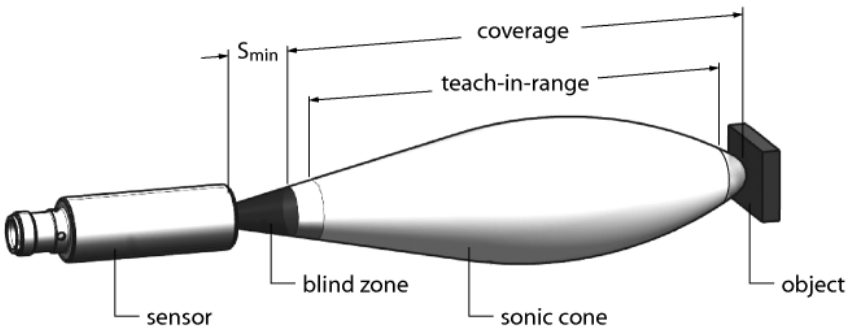

Setting the switching point

The ultrasonic sensor features a switching output with a teachable switching point. The yellow LED indicates whether the object is within the switching range of the sensor.

One switching point is taught. This must be within the detection range. In this operating mode the background is suppressed.

Simple Teach-In

Place object at the end of the switching range
Pin 2/seal the white core against Ub for 2…7 s

After successful teaching, the yellow LED flashes 3 times and the sensor runs automatically in normal operating mode.

LED response

In normal operating mode, the LED signals the switching state of the sensor.

Edition • 2018-05-20T13:10:08+02:00

Hans Turck GmbH & Co.KG ● D-45472 Mülheim an der Ruhr ● Witzlebenstraße 7 ● Tel. 0208 4952-0 ● Fax 0208 4952-264 ● more@turck.com ● www.turck.com

Accessories

Type code	Ident no.	Description	
VB2-SP1	A3501-29	Teach adapter	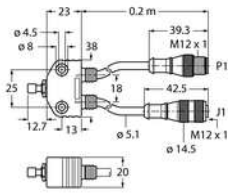

Edition • 2018-05-20T13:10:08+02:00