Stainless steel encoders



- Stainless steel encoder with high protection class
- High corrosion resistance
- Use in the area of food production or if sea-water proof is required
- Application e.g.:
  - packing machines
  - bottling machines
  - washing plants
  - mixers
  - cranes
  - hoists
  - marine outfitters

NUMBER OF PULSES

1 / 2 / 3 / 4 / 5 / 10 / 15 / 20 / 25 / 30 / 35 / 40 / 45 / 50 / 60 / 64 / 70 / 72 / 80 / **100** / 125 / 128 / 144 / 150 / 180 / 200 / 230 / **250** / 256 / 300 / 314 / 350 / 360 / 375 / 400 / 460 / 480 / **500** / 512 / 600 / 625 / 635 / 720 / 750 / 900 / **1000** / **1024** / 1200 / **1250** / 1500 / 1600 / 1800 / 2000 / 2048 / **2500** / 3000 / 3480 / **3600** / 3750 / 3968 / 4000 / **4096** / 4800 / **5000** / 5400 / 6000 / 7200 / 7680 / 8000 / 8192 / 9000 / 10000
Other number of pulses on request
Preferably available versions are printed in bold type.

TECHNICAL DATA mechanical

Shaft diameter	9.52 mm /10 mm
Absolute max. shaft load	radial 60 N / axial 40 N
Absolute max. speed	10 000 min^{-1}
Torque	≤ 1 Ncm
Moment of inertia	approx. 20 gcm^2
Protection class (EN 60529)	Housing IP67, bearings IP67
Operating temperature	–10 … +70 °C
Storage temperature	–25 … +85 °C
Vibration resistance (IEC 68-2-6)	100 m/s^2 (10 … 2000 Hz)
Shock resistance (IEC 68-2-27)	1000 m/s^2 (6 ms)
Connection	1.5 m cable[1] radial or axial
Housing	Stainless steel Ø 58 mm
Flange	Q=Square flange 63.5 x 63.5 mm
Weight approx.	620 g

[1] Other cable length on request

TECHNICAL DATA electrical

General design	as per DIN VDE 0160, protection class III, Contamination level 2, over voltage level II	
Supply voltage (SELV)	with RS 422 + Sense (T):	DC 5 V ± 10 %
	with RS 422 + Alarm (R):	DC 5 V ± 10 % oder DC 10 - 30 V [2]
	with push-pull (K, I):	DC 10 - 30 V [2]
Max. current w/o load	40 mA (DC 5 V), 60 mA (DC 10 V), 30 mA (DC 24 V)	
Standard output versions [3]	RS 422 (R):	A, B, N, $\overline{A}$, $\overline{B}$, $\overline{N}$, $\overline{Alarm}$
	RS 422 (T):	A, B, N, $\overline{A}$, $\overline{B}$, $\overline{N}$, Sense
	push-pull (K):	A, B, N, $\overline{Alarm}$
	push-pull complementary (I):	A, B, N, $\overline{A}$, $\overline{B}$, $\overline{N}$, $\overline{Alarm}$

[2] Pole protection with supply voltage DC 10 - 30 V
[3] Output description and technical data see chapter “Technical basics”

Stainless steel encoders

DIMENSIONAL DRAWINGS

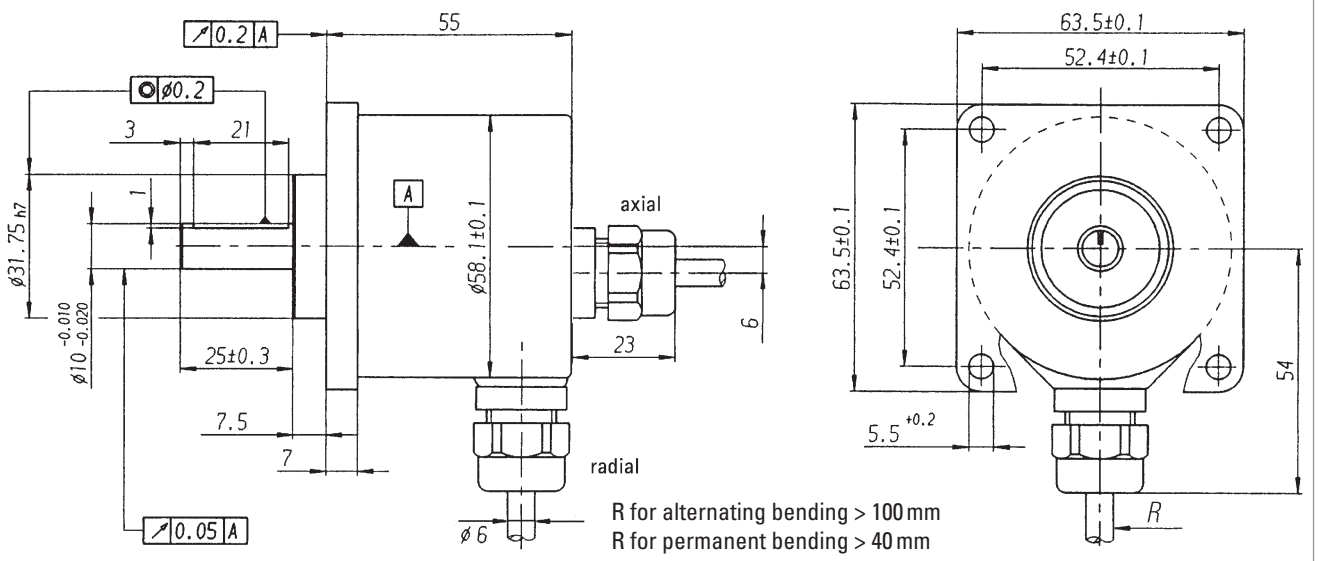

Dimensions in mm

PIN ASSIGNMENT

Connecting cable		Output	
Colour	Lead ∅ mm²	RS 422 T and R	push-pull K and I
red	0.5	DC 5/10 - 30 V	DC 10 - 30 V
red/yellow	0.14	Sense V_{CC}	Sense V_{CC}
white	0.14	Channel A	Channel A
white/brown	0.14	Channel $\overline{A}$	Channel $\overline{A}$ [1]
green	0.14	Channel B	Channel B
green/brown	0.14	Channel $\overline{B}$	Channel $\overline{B}$ [1]
yellow	0.14	Channel N	Channel N
yellow/brown	0.14	Channel $\overline{N}$	Channel $\overline{N}$ [1]
black	0.5	GND	GND
black/yellow	0.14	$\overline{Alarm}$ /Sense GND [2]	$\overline{Alarm}$
screen [3]		screen [3]	screen [3]

[1] only push-pull complementary (I)
[2] depending on ordering code
[3] connected with encoder housing

ORDERING INFORMATION

Type	Model	Number of pulses	Supply voltage	Flange, Protection, Shaft	Output	Connection
RI59-	**O** Standard	**1 ... 10 000**	**A** DC 5 V **E** DC 10 - 30 V	**Q.7A** Square 63.5 x 63.5, IP67, 10 mm x 25 **Q.7B** Square 63.5 x 63.5, IP67, 9.52 mm x 25	**T** RS 422 + Sense **K** push-pull short circuit proof **I** push-pull complementary **R** RS 422 + Alarm	**A** PVC cable axial **B** PVC cable radial