THE INFORMATION CONTAINED IN THIS DRAWING IS THE SOLE PROPERTY OF L-COM, INC. ANY REPRODUCTION IN PART OR WHOLE WITHOUT THE WRITTEN PERMISSION OF L-COM, INC. IS PROHIBITED.

REVISIONS			
REV	DESCRIPTION	DATE	APPROVED
E	ECN 7644: DELETED IMPEDANCE, UPDATED FORMAT, ROHS	10/17/14	D. CASTRO

DESCRIPTION	MATERIAL	FINISH
BODY	BRASS	NICKEL
CONTACT	BRASS	GOLD
DIELECTRIC	PBT	---
GASKET	RUBBER	---

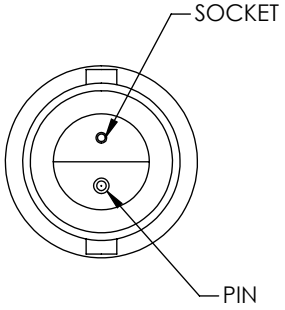

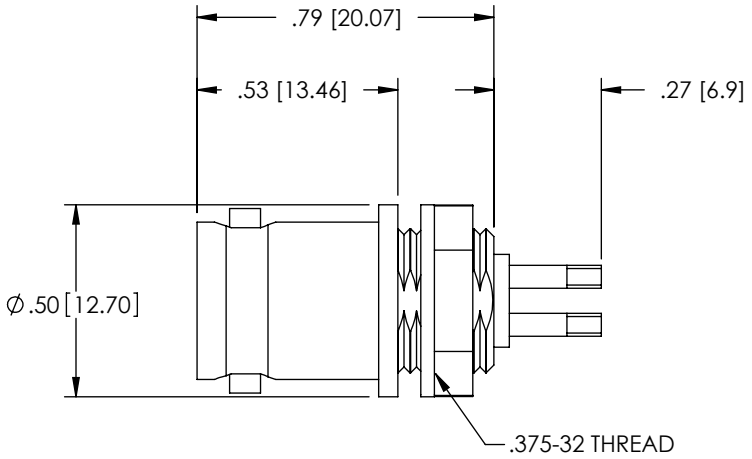

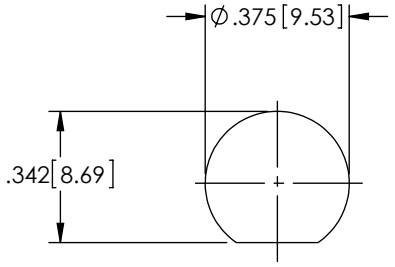

RECOMMENDED PANEL HOLE

NOTES:

ELECTRICAL:

FREQUENCY RANGE: 0-100 MHz

MISCELLANEOUS:

COMPONENT SHALL BE INDIVIDUALLY PACKAGED IN ACORDANCE WITH L-COM SPEC. PS-0031.

REGULATORY COMPLIANCE:
CE2011/65/EU(RoHS DIRECTIVE)

E

UNLESS OTHERWISE SPECIFIED,
DIMENSIONS ARE IN INCHES [mm]
OVERALL CABLE LENGTH TOLERANCE:
≤12 [305] = +1 [25] / -0
>12 [305] ≤60 [1524] = +2 [51] / -0
>60 [1524] ≤120 [3048] = +4 [102] / -0
>120 [3048] ≤300 [7620] = +6 [152] / -0
>300 [7620] = +5% / -0%
ALL OTHER DIMENSIONAL TOLERANCES:
.X = ± .2 [5.08]
.XX = ± .02 [.51]
.XXX = ±.005 [.13]
PROJECTION

APPROVALS	DATE
DRAWN BY TJC	02/07/2001
CHECKED BY DFP	02/07/2001
APPROVED BY RC	02/07/2001

CONFIGURATION DETAILS OF UNDIMENSIONED FEATURES MAY VARY

COLOR VARIATIONS MAY OCCUR

REF

L-COM Global Connectivity
45 BEECHWOOD DRIVE
NORTH ANDOVER, MA
01845

CATEGORY
COAXIAL

PRODUCT DESCRIPTION
RECEPTACLE TWIN BNC F SOLDER

SIZE	FSCM NO.	DWG. NO.	REV.
A	43321	BAC930	E

SCALE: NONE | CAD FILE: BAC930.SLDDRW | SHEET 1 OF 1