OGS280

Through-beam sensor transmitter

OGS-OOKG/US/CUBE

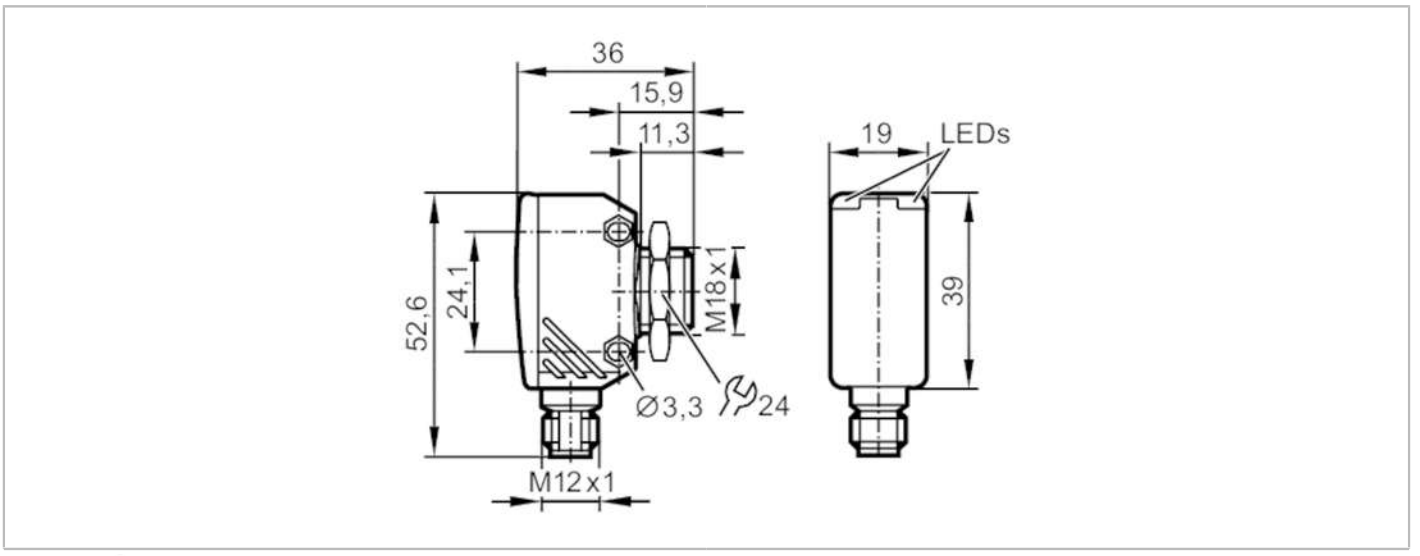

Product characteristics		
Type of light		red light
Housing		rectangular with M18 thread
Application		
Function principle		Through-beam sensor
Electrical data		
Operating voltage	[V]	10...30 DC; ("supply class 2" to cULus)
Voltage rating	[V]	32
Current consumption	[mA]	17
Protection class		III
Reverse polarity protection		yes
Max. power-on delay time	[ms]	300
Type of light		red light
Wave length	[nm]	662
Detection zone		
Transmitter / receiver		transmitter
Range	[m]	20
Max. light spot diameter	[mm]	800
Light spot dimensions refer to		at maximum range
Interfaces		
Communication interface		IO-Link
Transmission type		COM2 (38,4 kBaud)
IO-Link revision		1.1
SDCI standard		IEC 61131-9
Profiles		Smart Sensor: Device Identification, Device Diagnosis
SIO mode		no
Required master port type		A
Min. process cycle time	[ms]	2.5

OGS280

Through-beam sensor transmitter

OGS-OOKG/US/CUBE

IO-Link process data (cyclical)		**function**	**bit length**
		device status	4
IO-Link functions (acyclical)		application specific tag; operating hours counter	
Supported DeviceIDs		**Type of operation**	**DeviceID**
		default	1135
Note		For further information please see the IODD PDF file under "Downloads"	
Operating conditions			
Ambient temperature	[°C]	-25...60	
Storage temperature	[°C]	-40...60	
Protection		IP 65; IP 67	
Tests / approvals			
EMC		EN 60947-5-2	
MTTF	[years]	1011	
UL approval		Ta	-25...60 °C
		Enclosure type	Type 1
		power supply	Class 2
		File number UL	E174191
Mechanical data			
Weight	[g]	59.5	
Housing		rectangular with M18 thread	
Dimensions	[mm]	52.6 x 19 x 36	
Thread designation		M18 x 1	
Materials		diecast zinc; PEI	
Lens material		PMMA	
Lens alignment		side lens	
Displays / operating elements			
Display		operation	1 x LED, green
Accessories			
Items supplied		lock nut: 1	
Remarks			
Pack quantity		1 pcs.	

Electrical connection

Connector: 1 x M12; coding: A



OGS280

Through-beam sensor transmitter

OGS-OOKG/US/CUBE

Connection

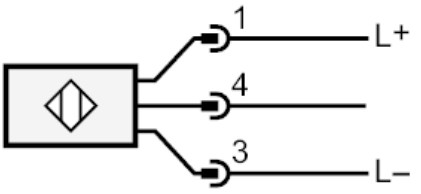

Diagrams and graphs

excess gain graph

