JUMO GmbH & Co. KG
Delivery address: Mackenrodtstraße 14
36039 Fulda, Germany
Postal address: 36035 Fulda, Germany
Phone: +49 661 6003-0
Fax: +49 661 6003-607
Email: mail@jumo.net
Internet: www.jumo.net

JUMO Instrument Co. Ltd.
JUMO House
Temple Bank, Riverway
Harlow, Essex CM 20 2DY, UK
Phone: +44 1279 63 55 33
Fax: +44 1279 62 50 29
Email: sales@jumo.co.uk
Internet: www.jumo.co.uk

JUMO Process Control, Inc.
6733 Myers Road
East Syracuse, NY 13057, USA
Phone: +1 315 437 5866
Fax: +1 315 437 5860
Email: info.us@jumo.net
Internet: www.jumousa.com

JUMO tecLine pH, JUMO tecLine Rd

pH and redox combination electrodes in glass or plastic shaft versions

201020 series - pH electrodes
201025 series - redox electrodes

Brief description

JUMO tecLine electrodes are high-quality sensors for professional applications in process and industrial measurement technology. These electrodes are known for their use of top-quality materials and components. They are designed as combined electrodes (the glass or metal electrode and the reference electrode are combined in one shaft). A temperature probe can also be integrated as an option, depending on the type.

Suitable versions are available to meet a wide variety of requirements:

JUMO tecLine

- For industrial and communal water and wastewater engineering
- For measurements in suspensions and varnishes
- For measurements in low-ion media
- For high-alkaline, high-temperature and sterilization processes
- For media containing fluorides and low-temperature applications
- PRO version for the toughest operating conditions

JUMO tecLine sensors are state-of-the-art for modern pH and redox electrodes. Each electrode is a quality product and is individually tested as a matter of routine. Modern production facilities ensure consistent characteristics.

General information about the construction of the JUMO tecLine series
All standard electrodes are made from physiologically safe and FDA-listed materials.
The sensors are equipped with lead-free shaft glass and are therefore conform to RoHS.



Type 201020/51... **Type 201025/51...**

Type 201020/76...

JUMO GmbH & Co. KG
Delivery address: Mackenrodtstraße 14
36039 Fulda, Germany
Postal address: 36035 Fulda, Germany
Phone: +49 661 6003-0
Fax: +49 661 6003-607
Email: mail@jumo.net
Internet: www.jumo.net

JUMO Instrument Co. Ltd.
JUMO House
Temple Bank, Riverway
Harlow, Essex CM 20 2DY, UK
Phone: +44 1279 63 55 33
Fax: +44 1279 62 50 29
Email: sales@jumo.co.uk
Internet: www.jumo.co.uk

JUMO Process Control, Inc.
6733 Myers Road
East Syracuse, NY 13057, USA
Phone: +1 315 437 5866
Fax: +1 315 437 5860
Email: info.us@jumo.net
Internet: www.jumousa.com

Active element of pH and redox electrodes

Membrane glass or active component	Designation	pH or redox range	Temperature range	Typical application
UW glass	Universal glass	pH 0 to 12 (briefly pH 14)	-5 to +80 °C	Water and wastewater engineering, process measurement technology, low-ion media
HA glass	High-alkaline glass	pH 0 to 14	-5 to +80 °C	For heavily alkaline media (above pH 12)
HT glass	High-temperature glass	pH 0 to 14	0 to 135 °C	For temperatures above 80 °C or for heavily alkaline media
DS glass	Steam-sterilizable glass	pH 0 to 12	-5 to +80 °C briefly up to 130 °C (20 min)	Biotechnology, pharmaceutical and food technology, sterilization processes
C glass	Fluoride-resistant glass	pH 0 to 11	-5 to +50 °C	Media containing fluorides (hydrofluoric acid) (c(HF) ≤ 1000 mg/l)
Platinum tip	Redox measurement	±2000 mV	-10 to +135 °C	Chromate reduction, nitrite oxidation, swimming pool and drinking water disinfection
Gold tip	Redox measurement	±2000 mV	-10 to +135 °C	Cyanide oxidation, water disinfection

Reference system design variations (reference electrode)

The only reference electrolytes used for JUMO tecLine electrodes are those that have no silver ions. A cartridge-style conduction system contains the silver/silver chloride (Ag/AgCl). Various forms of diaphragm are used.

Diaphragm type	Explanation	Possible electrolytes	Recommended minimum conductivity of the medium	Typical application/ limitations
1× ceramic diaphragm	High-quality zirconium dioxide diaphragm[a]	Polymerized solid electrolyte	Without salt reserve: 100 µS/cm With salt reserve: 50 µS/cm	General water or wastewater engineering, industrial processes, etc.
		Liquid KCl	5 µS/cm	
3× ceramic diaphragm	As above, the increased number means more KCl escapes	Polymerized solid electrolyte	Without salt reserve: 50 µS/cm With salt reserve: <50 µS/cm	For polluted or low-ion media; low-temperature applications
		Liquid KCl	0,1 µS/cm	
Glass fiber diaphragm	Glass fiber bundle instead of a ceramic diaphragm for electrodes with a plastic shaft	Polymerized solid electrolyte	Without salt reserve: 150 µS/cm With salt reserve: 100 µS/cm	General water or wastewater engineering (lightly polluted media)
PTFE ring diaphragm	Large surface area ring diaphragm	Polymerized solid electrolyte	Without salt reserve: 100 µS/cm With salt reserve: 50 µS/cm	Only for very heavily polluted media or adherent media containing oil, for example
Annular-gap or perforated diaphragm	Open transition between the solid electrolyte and the medium, implemented in annular or punctate form	Polymerized solid electrolyte	Without salt reserve: 500 µS/cm With salt reserve: 500 µS/cm	Suspensions, varnishes, media containing solids, heavily polluted media; not suitable for very pure drinking water or low-ion media

[a] Zirconium dioxide diaphragm: high-quality ceramic material of consistent porosity. This means optimum diffusion properties.

Other pH and redox electrodes can be found in the following data sheets:

- Data sheet 201005 – JUMO ecoLine/JUMO BlackLine pH and redox combination electrodes
- Data sheet 201081 – JUMO glass pH electrodes
- Data sheet 201083 – JUMO reference electrode
- Data sheet 201030 – JUMO laboratory pH combination electrodes
- Data sheet 201050 – JUMO ISFET pH combination electrode
- Data sheet 201082 – JUMO single/twin redox electrodes
- Data sheet 201085 – JUMO compensation thermometer

JUMO GmbH & Co. KG
Delivery address: Mackenrodtstraße 14
36039 Fulda, Germany
Postal address: 36035 Fulda, Germany
Phone: +49 661 6003-0
Fax: +49 661 6003-607
Email: mail@jumo.net
Internet: www.jumo.net

JUMO Instrument Co. Ltd.
JUMO House
Temple Bank, Riverway
Harlow, Essex CM 20 2DY, UK
Phone: +44 1279 63 55 33
Fax: +44 1279 62 50 29
Email: sales@jumo.co.uk
Internet: www.jumo.co.uk

JUMO Process Control, Inc.
6733 Myers Road
East Syracuse, NY 13057, USA
Phone: +1 315 437 5866
Fax: +1 315 437 5860
Email: info.us@jumo.net
Internet: www.jumousa.com

JUMO tecLine pH/Rd

pH and redox combination electrodes with ceramic or glass fiber diaphragm for water and process measurement technology

Typical areas of application

- Industrial and communal, as well as general water and wastewater engineering
- Process measurements, electroplating plants, final inspections, neutralization plants
- Drinking and well water, boiler feed water
- Lightly polluted wastewater
- Two-chamber system for when electrode poisons (e.g. sulphides, cyanides) are present
- Low-temperature applications (-30 to +30 °C), e.g. measurement in cooling systems
- Media containing fluorides (hydrofluoric acid) up to 1000 mg/l HF
- High-alkaline applications (reduced alkaline error at pH values > pH 12)

Key features

- High-quality zirconium dioxide diaphragms (glass fiber diaphragm for plastic shaft)
- Cartridge-style conduction system with a reference electrolyte with no silver ions
- Pressure-resistant versions up to 10 bar (50 °C)
- Temperature range: up to -5 to +80 °C (90 °C for redox) or -30 to +30 °C (for TT version)
- Temperature probe integration options
- Salt reserve option for increasing service life in media with lower conductivity or in drinking water
- JUMO HA glass for continuous measurements in the up to pH 14 range
- Redox versions with a platinum or gold tip up to ±2000 mV

Extra code

Salt reserve, extra code 837	
	The option is available to equip the electrode with a salt reserve, in the form of four salt rings (see illustration). This is recommended when using the electrode in media with fewer ions or at high flow rates. The salt reserve helps to increase the service life of the electrode. The rings are not a manufacturing defect (crystallization).

Two-chamber system (DOKA), extra code 838	
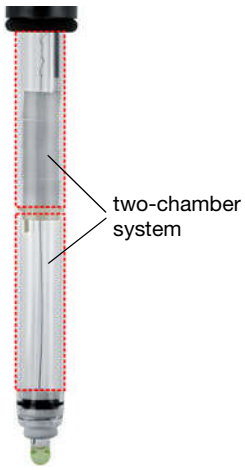	If electrode poisons (e.g. sulphides) are in the sample medium, the extended diffusion path (two consecutive chambers (double chamber)) and the double diaphragm foreclosure prevent electrode poisoning.

JUMO GmbH & Co. KG
Delivery address: Mackenrodtstraße 14
36039 Fulda, Germany
Postal address: 36035 Fulda, Germany
Phone: +49 661 6003-0
Fax: +49 661 6003-607
Email: mail@jumo.net
Internet: www.jumo.net

JUMO Instrument Co. Ltd.
JUMO House
Temple Bank, Riverway
Harlow, Essex CM 20 2DY, UK
Phone: +44 1279 63 55 33
Fax: +44 1279 62 50 29
Email: sales@jumo.co.uk
Internet: www.jumo.co.uk

JUMO Process Control, Inc.
6733 Myers Road
East Syracuse, NY 13057, USA
Phone: +1 315 437 5866
Fax: +1 315 437 5860
Email: info.us@jumo.net
Internet: www.jumousa.com

Dimensions

Type 20102x/51

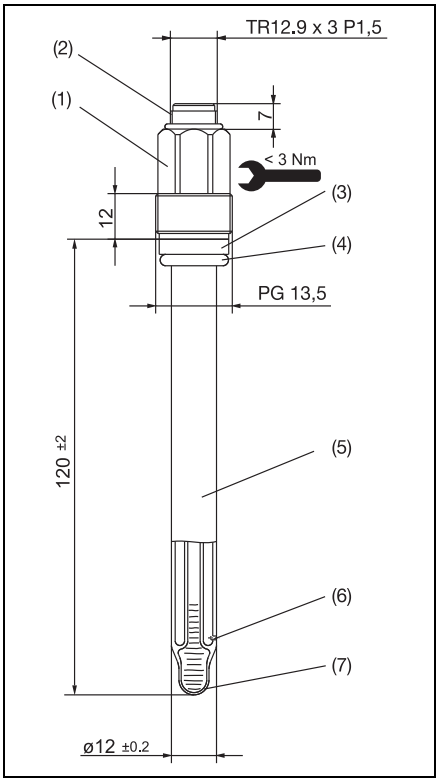

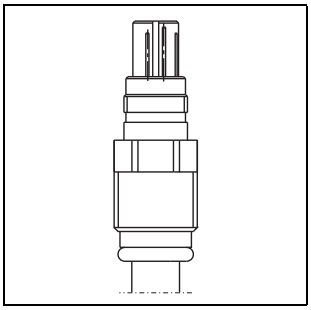

VP Pg13.5 screw head

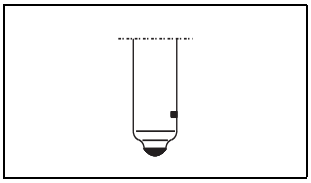

Platinum or gold tip
type 201025/...

(1) Pg13.5 screw head
(max. tightening torque 3 Nm)
(2) TR12.9 × 3 P1.5 thread
(3) Ring (PSU)
(4) O-Ring 10 × 3,5 (FPM70)
(5) Electrode shaft (DIN19263 glass)
(6) 1 to 3 diaphragms
(zirconium dioxide Ø 1 mm)
(7) Rounded membrane

Type 20102x/74

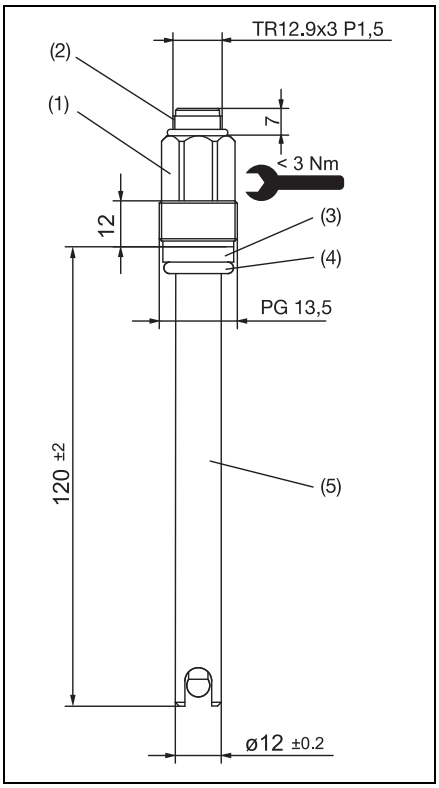

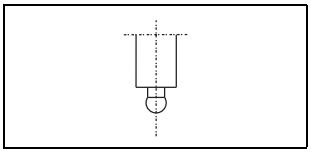

pH, no protection basket

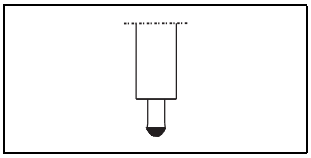

Platinum or gold tip
type 201025/74

(1) Pg13.5 screw head
(max. tightening torque 3 Nm)
(2) TR12.9 × 3 P1.5 thread
(3) Ring (PSU)
(4) O-ring 10 × 3.5 (FPM70)
(5) Electrode shaft (plastic PSU)

JUMO GmbH & Co. KG
Delivery address: Mackenrodtstraße 14
36039 Fulda, Germany
Postal address: 36035 Fulda, Germany
Phone: +49 661 6003-0
Fax: +49 661 6003-607
Email: mail@jumo.net
Internet: www.jumo.net

JUMO Instrument Co. Ltd.
JUMO House
Temple Bank, Riverway
Harlow, Essex CM 20 2DY, UK
Phone: +44 1279 63 55 33
Fax: +44 1279 62 50 29
Email: sales@jumo.co.uk
Internet: www.jumo.co.uk

JUMO Process Control, Inc.
6733 Myers Road
East Syracuse, NY 13057, USA
Phone: +1 315 437 5866
Fax: +1 315 437 5860
Email: info.us@jumo.net
Internet: www.jumousa.com

Order details

			(1)	**Basic type**
		201020		JUMO tecLine pH - pH combination electrodes for water and process measurement technology
		201025		JUMO tecLine Rd - redox combination electrodes for water and process measurement technology
			(2)	**Basic type extension**
x	x	51		Glass shaft, cartridge-style conduction system
o	o	72		PEI plastic shaft with protection basket, glass filament diaphragm, cartridge-style conduction system
o	o	73		PSU plastic shaft without protection basket, glass filament diaphragm, cartridge-style conduction system[a]
o	o	74		PSU plastic shaft with protection basket, glass filament diaphragm, cartridge-style conduction system[a]
			(3)	**Active component**
x		18		UW glass, pH 0 - 12 (briefly 14), -5 to +80 °C
o		11		C glass, pH 0 - 12, -5 to +50 °C, fluoride-resistant up to 1000 mg HF/l
o		17		HA glass, pH 0 - 14, -5 to +80 °C, high-alkaline use
	x	22		Platinum tip, redox range ±2000 mV, -5 to +90 °C
	o	32		Gold tip, redox range ±2000 mV, -5 to +90 °C
			(4)	**Diaphragm**
o	o	05		1× glass filament diaphragm[b]
x	x	07		1× zirconium dioxide diaphragm (special ceramic)
o	o	09		3× zirconium dioxide diaphragm (special ceramic)
			(5)	**Connection**
o		18		VP Pg13.5 screw head[c]
x	x	22		Pg13.5. screw head
			(6)	**Fitting length**
x	x	120		120 mm (standard)
o	o	225		225 mm
				Other length on request
			(7)	**Extra codes**
o	o	000		None
x	x	837		Salt reserve
o	o	838		Two-chamber system (DOKA) with KCl/KCl bridge
o		840		Pt100 temperature probe
o		841		Pt1000 temperature probe

[a] Only available in fitting length 225.
[b] Only for basic type extension 72, 73 or 74.
[c] For electrodes with extra code 840 or 841.

x = as standard
o = option

	(1)		(2)		(3)		(4)		(5)		(6)		(7)	
Order code		/		-		-		-		-		/		, ...[a]
Order example	201020	/	51	-	18	-	07	-	22	-	120	/	837	

[a] List extra codes in sequence, separated by commas.

Note:
The type code is not a modular system.
If possible, choose items listed under **"stock versions"** or **"production versions"** for your orders.
We will have to technically inspect and approve a free combination of individual key features.

JUMO GmbH & Co. KG
Delivery address: Mackenrodtstraße 14
36039 Fulda, Germany
Postal address: 36035 Fulda, Germany
Phone: +49 661 6003-0
Fax: +49 661 6003-607
Email: mail@jumo.net
Internet: www.jumo.net

JUMO Instrument Co. Ltd.
JUMO House
Temple Bank, Riverway
Harlow, Essex CM 20 2DY, UK
Phone: +44 1279 63 55 33
Fax: +44 1279 62 50 29
Email: sales@jumo.co.uk
Internet: www.jumo.co.uk

JUMO Process Control, Inc.
6733 Myers Road
East Syracuse, NY 13057, USA
Phone: +1 315 437 5866
Fax: +1 315 437 5860
Email: info.us@jumo.net
Internet: www.jumousa.com

pH stock versions

(delivery 3 working days after receipt of order)

Typ	Brief description	Part no.
201020/51-18-07-22-120/837	Glass shaft, zirconium dioxide diaphragma, screw head, 120 mm, salz reserve	00300151
201020/51-18-07-22-120/000	Glass shaft, zirconium dioxide diaphragma, screw head, 120 mm	00300148
201020/51-18-07-18-120/837, 840	Glass shaft, zirconium dioxide diaphragma, VP screw head, 120 mm, salt reserve, integrated Pt100	00595184
201020/51-17-07-22-120/837	Glass shaft, zirconium dioxide diaphragma, screw head, 120mm (high-alkaline applications)	00408953
201020/74-18-05-22-225/000	PSU plastic shaft with protection basket, glass filament diaphragm, screw head, 225 mm	00354295
201020/73-18-05-22-225/000	PSU plastic shaft without protection basket, glass filament diaphragm, screw head, 225 mm	00330857
201020/72-18-05-22-120/837, 838	PEI plastic shaft with protection basket, glass filament diaphragm, screw head, 120 mm, salt reserve, two-chamber system	00303398

pH production versions

(delivery 10 working days after receipt of order)

Typ	Brief description	Part no.
201020/51-18-07-22-225/000	Glass shaft, zirconium dioxide diaphragm, screw head, 225 mm	00399535
201020/51-11-07-22-120/000	Glass shaft, zirconium dioxide diaphragm, screw head, 120 mm	00375623

Redox stock versions

(delivery 3 working days after receipt of order)

Typ	Brief description	Part no.
201025/51-22-07-22-120/837	Glass shaft, platinum tip, zirconium dioxide diaphragm, screw head, 120 mm, salt reserve	00300397
201025/51-32-07-22-120/837	Glass shaft, gold tip, zirconium dioxide diaphragm, screw head, 120 mm, salt reserve	00300396
201025/72-22-05-22-120/837, 838	PEI plastic shaft without protection basket, platinum tip, glass filament diaphragm, screw head, 120 mm, salt reserve, two-chamber system	00084011

JUMO GmbH & Co. KG
Delivery address: Mackenrodtstraße 14
36039 Fulda, Germany
Postal address: 36035 Fulda, Germany
Phone: +49 661 6003-0
Fax: +49 661 6003-607
Email: mail@jumo.net
Internet: www.jumo.net

JUMO Instrument Co. Ltd.
JUMO House
Temple Bank, Riverway
Harlow, Essex CM 20 2DY, UK
Phone: +44 1279 63 55 33
Fax: +44 1279 62 50 29
Email: sales@jumo.co.uk
Internet: www.jumo.co.uk

JUMO Process Control, Inc.
6733 Myers Road
East Syracuse, NY 13057, USA
Phone: +1 315 437 5866
Fax: +1 315 437 5860
Email: info.us@jumo.net
Internet: www.jumousa.com

JUMO tecLine pH/Rd

pH and redox combination electrodes with ceramic or glass fiber diaphragm for wastewater, heavily polluted media, suspensions, varnishes

Typical areas of application

- Industrial wastewater engineering
- Process measurements, electroplating plants, paper industry, drinks industry
- Wastewater containing oil
- Suspensions, varnishes, media containing solid particles
- Two-chamber system for when electrode poisons are present
- Media containing fluorides (hydrofluoric acid) up to 1000 mg/l HF

Key features

- A dirt-repellent PTFE ring diaphragm with a highly viscous KCl solution (gel) or a perforated or annular-gap diaphragm with a polymerized solid electrolyte – virtually blockage-free
- Cartridge-style conduction system with a reference electrolyte with no silver ions
- Pressure-resistant versions up to 10 bar (50 °C)
- Temperature range: see order details
- Temperature probe integration options
- Salt reserve option for increasing service life in media with lower conductivity

JUMO GmbH & Co. KG
Delivery address: Mackenrodtstraße 14
36039 Fulda, Germany
Postal address: 36035 Fulda, Germany
Phone: +49 661 6003-0
Fax: +49 661 6003-607
Email: mail@jumo.net
Internet: www.jumo.net

JUMO Instrument Co. Ltd.
JUMO House
Temple Bank, Riverway
Harlow, Essex CM 20 2DY, UK
Phone: +44 1279 63 55 33
Fax: +44 1279 62 50 29
Email: sales@jumo.co.uk
Internet: www.jumo.co.uk

JUMO Process Control, Inc.
6733 Myers Road
East Syracuse, NY 13057, USA
Phone: +1 315 437 5866
Fax: +1 315 437 5860
Email: info.us@jumo.net
Internet: www.jumousa.com

Dimensions

Type 201020/51

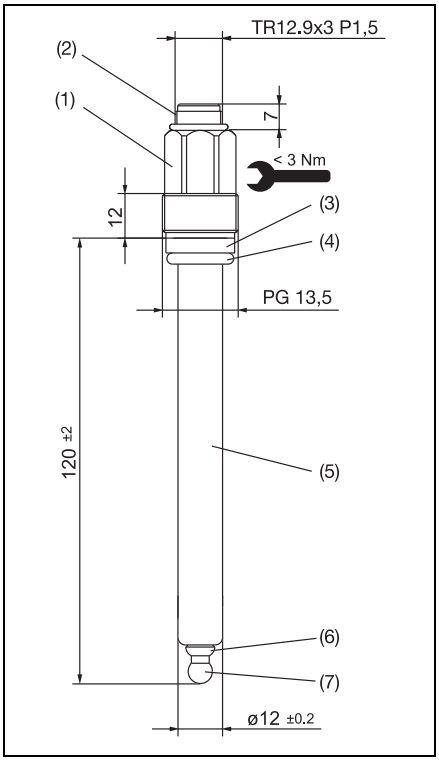

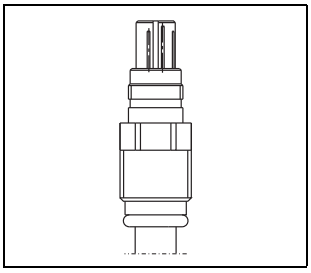

VP Pg13.5 screw head

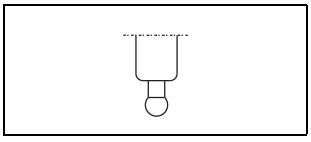

Annular-gap diaphragm

(1) Pg13.5 screw head (max. tightening torque 3 Nm)
(2) TR12.9 × 3 P1.5 thread
(3) Ring (PSU)
(4) O-ring 10 × 3,5 (FPM70)
(5) Electrode shaft (DIN19263 glass)
(6) Ring diaphragm (PTFE)
(7) Rounded membrane

Type 201025/51

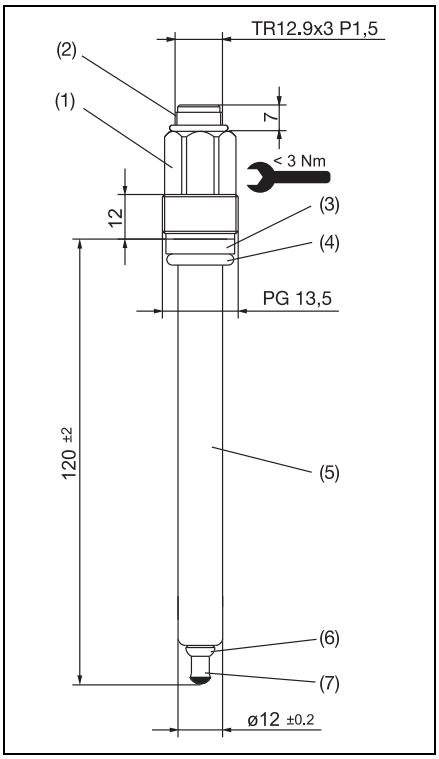

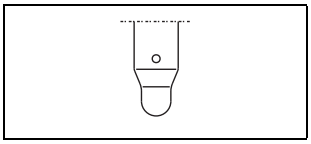

Perforated diaphragm

(1) Pg13.5 screw head (max. tightening torque 3 Nm)
(2) TR12.9 × 3 P1.5 thread
(3) Ring (PSU)
(4) O-ring 10 × 3,5 (FPM70)
(5) Electrode shaft (DIN19263 glass)
(6) Ring diaphragm (PTFE)
(7) Platinum or gold tip

JUMO GmbH & Co. KG
Delivery address: Mackenrodtstraße 14
36039 Fulda, Germany
Postal address: 36035 Fulda, Germany
Phone: +49 661 6003-0
Fax: +49 661 6003-607
Email: mail@jumo.net
Internet: www.jumo.net

JUMO Instrument Co. Ltd.
JUMO House
Temple Bank, Riverway
Harlow, Essex CM 20 2DY, UK
Phone: +44 1279 63 55 33
Fax: +44 1279 62 50 29
Email: sales@jumo.co.uk
Internet: www.jumo.co.uk

JUMO Process Control, Inc.
6733 Myers Road
East Syracuse, NY 13057, USA
Phone: +1 315 437 5866
Fax: +1 315 437 5860
Email: info.us@jumo.net
Internet: www.jumousa.com

Order details

			(1)	**Basic type**
		201020		JUMO tecLine pH - pH combination electrodes with ceramic or glass fiber diaphragm for wastewater, heavily polluted media, suspensions, varnishes
		201025		JUMO tecLine Rd - redox combination electrodes with ceramic or glass fiber diaphragm for wastewater, heavily polluted media, suspensions, varnishes
			(2)	**Basic type extension**
x	x	51		Glass shaft, cartridge-style conduction system
			(3)	**Active component**
x		18		UW glass, pH 0 - 12 (briefly 14), -5 to +80 °C
o		11		C glass, pH 0 - 12, -5 to +50 °C, fluoride-resistant up to 1000 mg HF/l
o		17		HA glass, pH 0 - 14, -5 to +80 °C, high-alkaline use
	x	22		Platinum tip, redox range ±2000 mV, -5 to +90 °C
	o	32		Gold tip, redox range ±2000 mV, -5 to +90 °C
			(4)	**Diaphragm**
x	x	04		PTFE ring diaphragm
o	o	10		Annular-gap diaphragm, gel of polymerized solid electrolyte ("diaphragm-free")
o	o	11		Perforated diaphragm, gel of polymerized solid electrolyte ("diaphragm-free")
			(5)	**Connection**
o		18		VP Pg13.5 screw head[a]
x	x	22		Pg13.5 screw head
			(6)	**Fitting length**
x	x	120		120 mm (standard)
o	o	225		225 mm
				Other lengths on request
			(7)	**Extra codes**
o	o	000		None
x	x	837		Salt reserve
o	o	838		Two-chamber system (DOKA) with KCl/KCl bridge[b]
o		840		Pt100 temperature probe[c]
o		841		Pt1000 temperature probe[c]

[a] For electrodes with extra code 840 or 841.
[b] Not in conjunction with diaphragm 10 or 11.
[c] With connection 18 only.

x = as standard
o = option

	(1)		(2)		(3)		(4)		(5)		(6)		(7)	
Order code		/		-		-		-		-		/		, ...[a]
Order example	201020	/	51	-	18	-	04	-	22	-	120	/	837	

[a] List extra codes in sequence, separated by commas.

Note:
The type code is not a modular system.
If possible, choose items listed under **"stock versions"** or **"production versions"** for your orders.
We will have to technically inspect and approve a free combination of individual key features.

JUMO GmbH & Co. KG
Delivery address: Mackenrodtstraße 14
36039 Fulda, Germany
Postal address: 36035 Fulda, Germany
Phone: +49 661 6003-0
Fax: +49 661 6003-607
Email: mail@jumo.net
Internet: www.jumo.net

JUMO Instrument Co. Ltd.
JUMO House
Temple Bank, Riverway
Harlow, Essex CM 20 2DY, UK
Phone: +44 1279 63 55 33
Fax: +44 1279 62 50 29
Email: sales@jumo.co.uk
Internet: www.jumo.co.uk

JUMO Process Control, Inc.
6733 Myers Road
East Syracuse, NY 13057, USA
Phone: +1 315 437 5866
Fax: +1 315 437 5860
Email: info.us@jumo.net
Internet: www.jumousa.com

pH stock versions

(delivery 3 working days after receipt of order

Type	Brief description	Part no.
201020/51-18-04-22-120/000	Glass shaft, PTFE diaphragm, Pg13.5 screw head, 120 mm	00327907
201020/51-18-04-22-120/837	Glass shaft, PTFE diaphragm, Pg13.5 screw head, 120 mm, salt reserve	00321035
201020/51-18-04-22-225/837	Glass shaft, PTFE diaphragm, Pg13.5 screw head, 225 mm, salt reserve	00327142
201020/51-17-04-22-120/837	Glass shaft, PTFE diaphragm, Pg13.5 screw head, 120 mm (high-alkaline applications)	00332794
201020/51-18-04-18-120/837, 840	Glass shaft, PTFE diaphragm, VP Pg13.5 plug head, 120 mm, salt reserve, integrated Pt100	00595188
201020/51-18-10-22-120/837	Glass shaft, annular-gap diaphragm, Pg13.5 screw head 120 mm, salt reserve	00446112

pH production versions

(delivery 10 working days after receipt of order

Type	Brief description	Part no.
201020/51-18-04-17-120/840	Glass shaft, PTFE diaphragm, VP Pg13.5 screw head, 120 mm, integrated Pt100	00383865
201020/51-18-04-22-225/000	Glass shaft, PTFE diaphragm, Pg13.5 screw head, 225 mm	00372505
201020/51-18-11-22-120/837	Glass shaft, perforated diaphragm and solid electrolyte, screw head, 120 mm, salt reserve	00445428
201020/51-18-11-18-120/837, 840	Glass shaft, perforated diaphragm and solid electrolyte, VP screw head, 120 mm, salt reserve, integrated Pt100	00516974

Redox stock versions

(delivery 3 working days after receipt of order)

Type	Brief description	Part no.
201025/51-22-04-22-120/837	Glass shaft, platinum tip, PTFE diaphragm, Pg13.5 screw head, 120 mm, salt reserve	00321746

JUMO GmbH & Co. KG
Delivery address: Mackenrodtstraße 14
36039 Fulda, Germany
Postal address: 36035 Fulda, Germany
Phone: +49 661 6003-0
Fax: +49 661 6003-607
Email: mail@jumo.net
Internet: www.jumo.net

JUMO Instrument Co. Ltd.
JUMO House
Temple Bank, Riverway
Harlow, Essex CM 20 2DY, UK
Phone: +44 1279 63 55 33
Fax: +44 1279 62 50 29
Email: sales@jumo.co.uk
Internet: www.jumo.co.uk

JUMO Process Control, Inc.
6733 Myers Road
East Syracuse, NY 13057, USA
Phone: +1 315 437 5866
Fax: +1 315 437 5860
Email: info.us@jumo.net
Internet: www.jumousa.com

JUMO tecLine pH/Rd

pH and redox combination electrodes for high-temperature and sterilization applications

Typical areas of application

- Processes with permanently elevated temperatures (max. 135 °C)
- Sterilization applications
- Two-chamber system for when electrode poisons are present
- Media containing fluorides (hydrofluoric acid) up to 1000 mg HF/l

Key features

- Proven JUMO HT glass (pH high-temperature membrane glass) 0 - 14 pH
- JUMO DS membrane glass for sterilization applications
- Cartridge-style conduction system with a (gel) reference electrolyte with no silver ions
- Pressure-resistant versions up to 10 bar (50 °C)
- Temperature range: 0 to 135 °C[1]
- Temperature probe integration options
- Redox versions with a platinum or gold tip up to ±2000 mV

[1] Sterilizable version: sterilization at max. 135 °C for up to 20 minutes. Continuous electrode operation after sterilization up to max. 80 °C.

JUMO GmbH & Co. KG
Delivery address: Mackenrodtstraße 14
36039 Fulda, Germany
Postal address: 36035 Fulda, Germany
Phone: +49 661 6003-0
Fax: +49 661 6003-607
Email: mail@jumo.net
Internet: www.jumo.net

JUMO Instrument Co. Ltd.
JUMO House
Temple Bank, Riverway
Harlow, Essex CM 20 2DY, UK
Phone: +44 1279 63 55 33
Fax: +44 1279 62 50 29
Email: sales@jumo.co.uk
Internet: www.jumo.co.uk

JUMO Process Control, Inc.
6733 Myers Road
East Syracuse, NY 13057, USA
Phone: +1 315 437 5866
Fax: +1 315 437 5860
Email: info.us@jumo.net
Internet: www.jumousa.com

Dimensions

Type 20102x/75

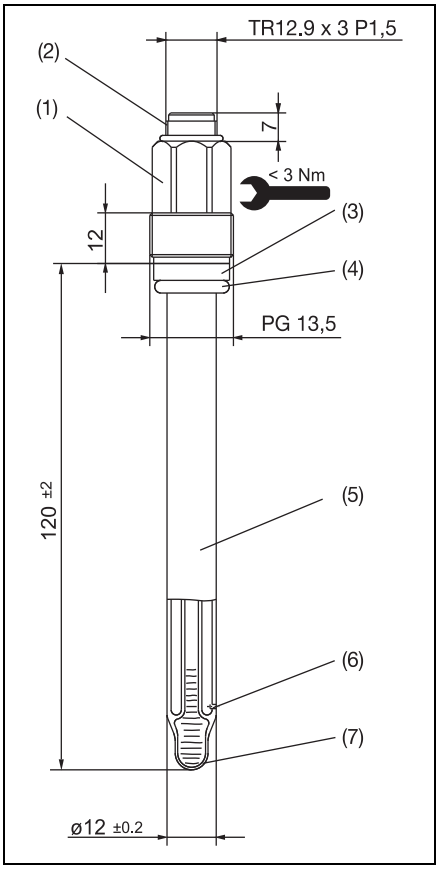

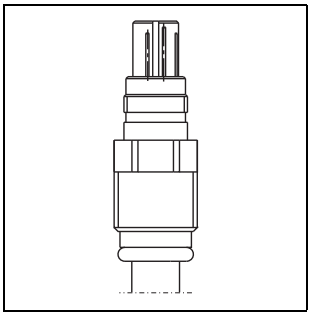

VP Pg13.5 screw head

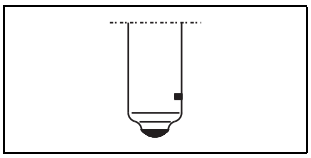

Platinum or gold tip
type 201025/...

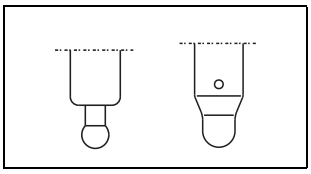

Annular-gap/perforated
diaphragm

(1) Pg13.5 screw head
(max. tightening torque 3 Nm)
(2) TR12.9 × 3 P1.5 thread
(3) Ring (PSU)
(4) O-ring 10 × 3,5 (FPM70)
(5) Electrode shaft (DIN 19263 glass)
(6) 1 to 3 diaphragms
(zirconium dioxide Ø 1 mm)
(7) Rounded membrane

JUMO GmbH & Co. KG
Delivery address: Mackenrodtstraße 14
36039 Fulda, Germany
Postal address: 36035 Fulda, Germany
Phone: +49 661 6003-0
Fax: +49 661 6003-607
Email: mail@jumo.net
Internet: www.jumo.net

JUMO Instrument Co. Ltd.
JUMO House
Temple Bank, Riverway
Harlow, Essex CM 20 2DY, UK
Phone: +44 1279 63 55 33
Fax: +44 1279 62 50 29
Email: sales@jumo.co.uk
Internet: www.jumo.co.uk

JUMO Process Control, Inc.
6733 Myers Road
East Syracuse, NY 13057, USA
Phone: +1 315 437 5866
Fax: +1 315 437 5860
Email: info.us@jumo.net
Internet: www.jumousa.com

Order details

			(1)	**Basic type**
		201020		JUMO tecLine pH - pH combination electrodes with ceramic or glass fiber diaphragm for high-temperature and sterilization applications
		201025		JUMO tecLine Rd - redox combination electrodes with ceramic or glass fiber diaphragm for high-temperature and sterilization applications
			(2)	**Basic type extension**
x	x	75		Glass shaft, high-temperature gel, sealed, cartridge-style conduction system
			(3)	**Active component**
x		12		HT glass, pH 0 - 14, -5 to +135 °C
o		14		DS glass, pH 0 - 14, -5 to +80 °C, can be sterilized for 20 minutes at 135 °C
	x	22		Platinum tip, redox range ±2000 mV, -5 to +135 °C
	o	32		Gold tip, redox range ±2000 mV, -5 to +135 °C
			(4)	**Diaphragm**
x	x	07		1× zirkonium dioxide diaphragm (special ceramic)
o	o	09		3× zirkonium dioxide diaphragm (special ceramic)
o	o	10		Annular-gap diaphragm, gel of polymerized solid electrolyte ("diaphragm-free")[a]
o	o	11		Perforated diaphragm, gel of polymerized solid electrolyte ("diaphragm-free")[a]
			(5)	**Connection**
o		18		VP Pg13.5 screw head[a]
x	x	22		Pg13.5 screw head
			(6)	**Fitting length**
x	x	120		120 mm (standard)
o	o	225		225 mm
				Other length on request
			(7)	**Extra codes**
o	o	000		None
x	x	837		Salt reserve[b]
o		840		Pt100 temperature probe[c]
o		841		Pt1000 temperature probe[c]

[a] For electrodes with extra code 840 or 841.
[b] Only in conjunction with diaphragma 10 and 11.
[c] With connection 18 only.

x = serienmäßig
o = optional

	(1)		(2)		(3)		(4)		(5)		(6)		(7)
Bestellschlüssel		/		-		-		-		-		/	
Bestellbeispiel	201020	/	75	-	12	-	07	-	22	-	120	/	000

Note:
The type code is not a modular system.
If possible, choose items listed under **"stock versions"** or **"production versions"** for your orders.
We will have to technically inspect and approve a free combination of individual key features.

pH stock versions

(delivery 3 working days after receipt of order)

Type	Brief description	Part no.
201020/75-12-07-22-120/000	Glass shaft, HT gel, zirconium dioxide diaphragm, Pg13.5 screw head, 120 mm (high-temperature applications)	00304030

pH production versions

(delivery 10 working days after receipt of order)

Type	Brief description	Part no.
201020/75-12-11-18-120/837, 840	Glass shaft, solid electrolyte, perforated diaphragm, VP Pg13.5 screw head, 120 mm (high-temperature applications)	00542508

JUMO GmbH & Co. KG
Delivery address: Mackenrodtstraße 14
36039 Fulda, Germany
Postal address: 36035 Fulda, Germany
Phone: +49 661 6003-0
Fax: +49 661 6003-607
Email: mail@jumo.net
Internet: www.jumo.net

JUMO Instrument Co. Ltd.
JUMO House
Temple Bank, Riverway
Harlow, Essex CM 20 2DY, UK
Phone: +44 1279 63 55 33
Fax: +44 1279 62 50 29
Email: sales@jumo.co.uk
Internet: www.jumo.co.uk

JUMO Process Control, Inc.
6733 Myers Road
East Syracuse, NY 13057, USA
Phone: +1 315 437 5866
Fax: +1 315 437 5860
Email: info.us@jumo.net
Internet: www.jumousa.com

JUMO tecLine pH/Rd

pH and redox combination electrodes with liquid KCl filling, refillable

Typical areas of application

- Media with very low conductivity (> 0,1 µS/cm in case of 3 diaphragms, > 5 µS/cm in case of 1diaphragm)
- Ultra-pure water applications
- Electroplating processes, PCB production
- Fermenters
- Heavily polluted, adherent media
- Suspensions, varnishes
- Boiler feed water

Key features

- Can be combined with all JUMO membrane glasses
- Zirconium dioxide diaphragm
- Cartridge-style conduction system Refillable, KCl solution with no silver ions
- Temperature range: -10 to +135 °C[1]
- Redox versions with platinum or gold tip ± 2000 mV

[1] Depending on the type of glass

JUMO GmbH & Co. KG
Delivery address: Mackenrodtstraße 14
36039 Fulda, Germany
Postal address: 36035 Fulda, Germany
Phone: +49 661 6003-0
Fax: +49 661 6003-607
Email: mail@jumo.net
Internet: www.jumo.net

JUMO Instrument Co. Ltd.
JUMO House
Temple Bank, Riverway
Harlow, Essex CM 20 2DY, UK
Phone: +44 1279 63 55 33
Fax: +44 1279 62 50 29
Email: sales@jumo.co.uk
Internet: www.jumo.co.uk

JUMO Process Control, Inc.
6733 Myers Road
East Syracuse, NY 13057, USA
Phone: +1 315 437 5866
Fax: +1 315 437 5860
Email: info.us@jumo.net
Internet: www.jumousa.com

Construction of an electrolyte bridge für combination electrodes with liquid KCl supply

In water with very low conductivity it is recommended to measure with a pH electrode, which is filled with liquid KCl as reference electrolyte. The KCl solution is released into the measuring medium through the diaphragm and thus locally increases the electrical conductivity of the measuring medium. This decreases the resistance between pH electrode part and reference electrode part and enables a stable pH measurement. Potassium chloride (KCl) "contaminates" the previously treated water, therefore, it should be checked whether the water has to be discarded after the measurement.

For more information, see also JUMO technical essay (FAS) 614 „Information on high-purity water“.

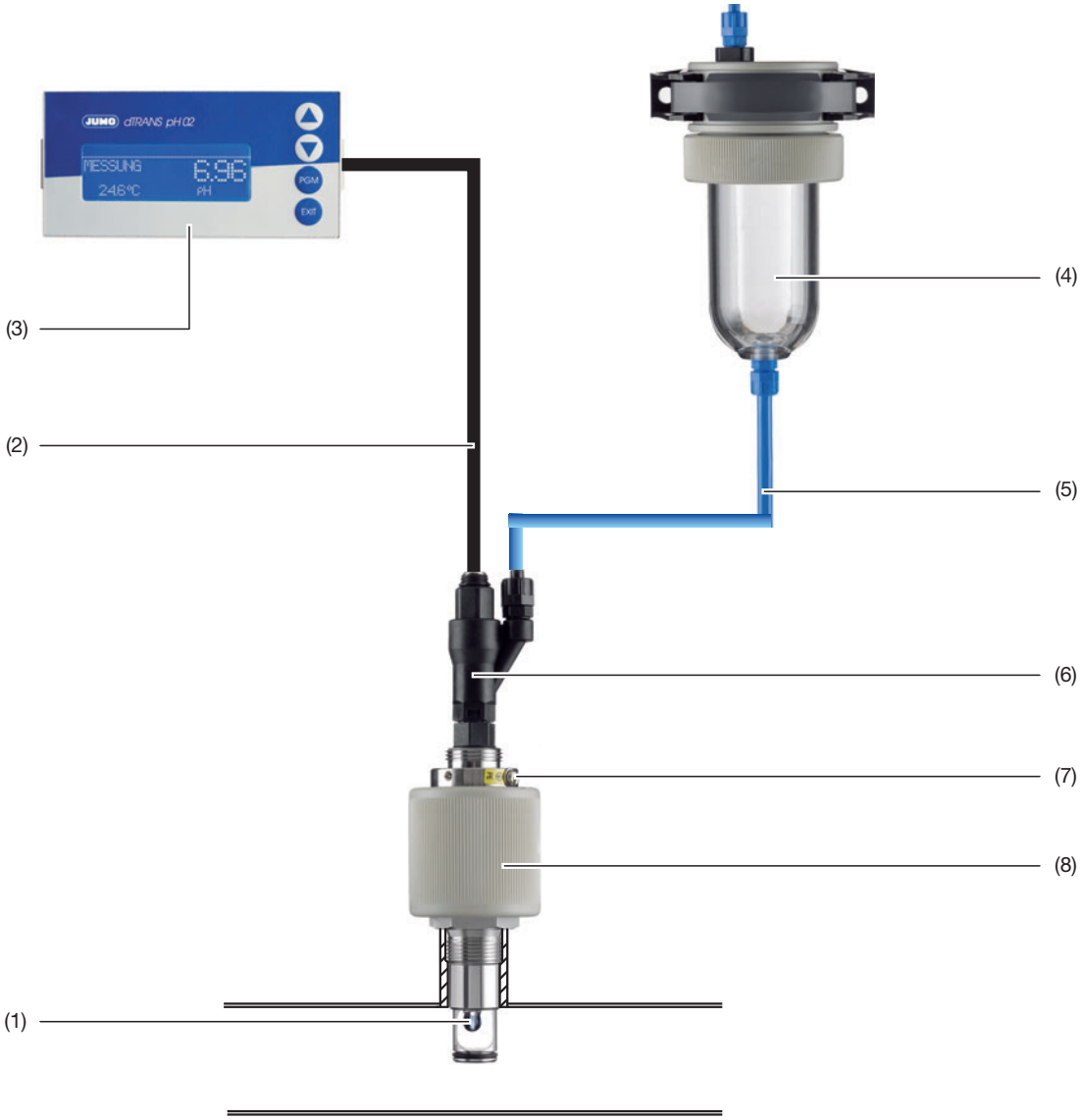

(1) pH combination electrode with KCl liquid electrolyte, e.g. 201020/76-18-09-22-180/833, part no. 00373964
(2) Electrode connecting cable, e.g. 202990/02-92-5-13, part no. 00307298
(3) Transmitter JUMO dTRANS pH 02, e.g. 202551/01-8-01-4-0-00-23/000, part no. 00560379
(4) KCl storage vessel, pressure-resistant, for wall mounting, part no. 00060254
(5) Hose coupling from diaphragm tube to KCl storage vessel (included in 4)
(6) KCl connection (accessorie for 1), part no. 00475617
(7) Grounding
(8) Quick-change fittings, e.g. 202822/105-062-26, part no. 00366915

JUMO GmbH & Co. KG
Delivery address: Mackenrodtstraße 14
36039 Fulda, Germany
Postal address: 36035 Fulda, Germany
Phone: +49 661 6003-0
Fax: +49 661 6003-607
Email: mail@jumo.net
Internet: www.jumo.net

JUMO Instrument Co. Ltd.
JUMO House
Temple Bank, Riverway
Harlow, Essex CM 20 2DY, UK
Phone: +44 1279 63 55 33
Fax: +44 1279 62 50 29
Email: sales@jumo.co.uk
Internet: www.jumo.co.uk

JUMO Process Control, Inc.
6733 Myers Road
East Syracuse, NY 13057, USA
Phone: +1 315 437 5866
Fax: +1 315 437 5860
Email: info.us@jumo.net
Internet: www.jumousa.com

Dimensions

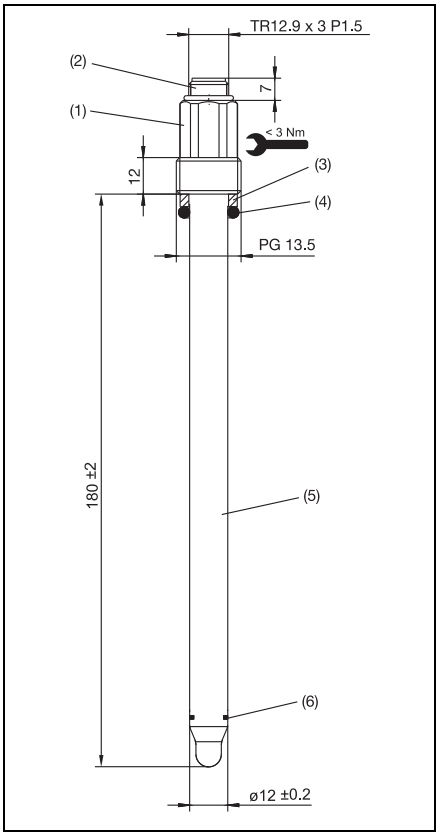

Electrode type 201020/76-...
Fitting length180 mm
Zirconium dioxide diaphragm
(diaphragm 09)

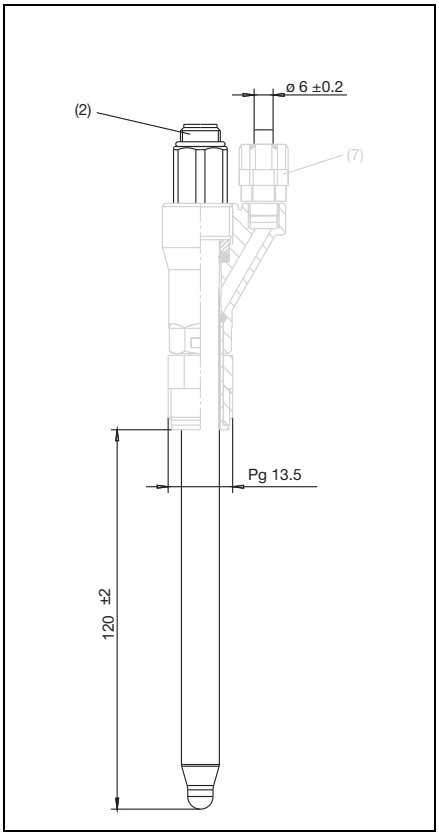

Electrode type 201020/76-..-..-..-.../833
Fitting length 180 mm
Applicable for KCl connection

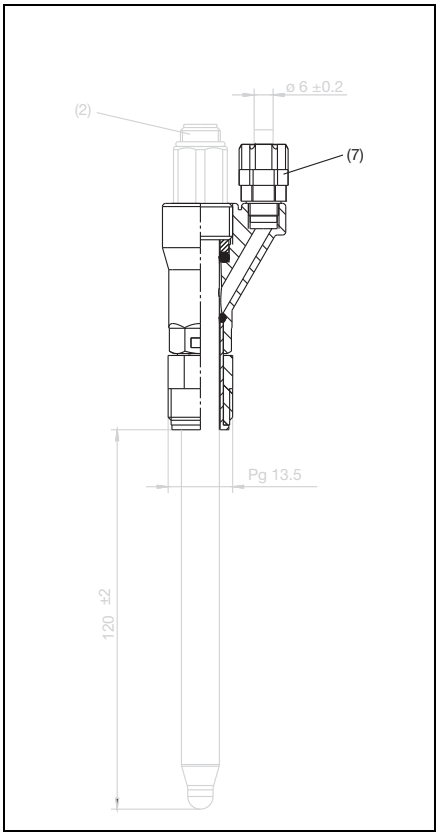

KCl connection
for electrode type 201020/76-..-..-..-.../833
(ordered as accessorie, part no. 00475617)
Material: PPO (polyphenylene ether)
Temperature range: 0 to 105 °C,
briefly +130 °C
Pressure range: max. 10 bar (25 °C)

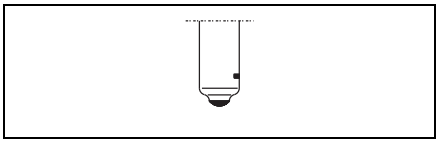

Platinum or gold tip
type 201025/...

(1) Pg13.5 screw head (max. tightening torque 3 Nm)
(2) TR12.9 × 3 P1.5 thread
(3) Ring (PSU)
(4) O-ring 10 × 3,5 (FPM70)
(5) Electrode shaft (DIN19263 glass)
(6) 1 to 3 diaphragms
(7) Connection for overpressure attachment

JUMO GmbH & Co. KG
Delivery address: Mackenrodtstraße 14
36039 Fulda, Germany
Postal address: 36035 Fulda, Germany
Phone: +49 661 6003-0
Fax: +49 661 6003-607
Email: mail@jumo.net
Internet: www.jumo.net

JUMO Instrument Co. Ltd.
JUMO House
Temple Bank, Riverway
Harlow, Essex CM 20 2DY, UK
Phone: +44 1279 63 55 33
Fax: +44 1279 62 50 29
Email: sales@jumo.co.uk
Internet: www.jumo.co.uk

JUMO Process Control, Inc.
6733 Myers Road
East Syracuse, NY 13057, USA
Phone: +1 315 437 5866
Fax: +1 315 437 5860
Email: info.us@jumo.net
Internet: www.jumousa.com

Order details

			(1)	**Basic type**
		201020		JUMO tecLine pH - pH combination electrodes with liquid KCl filling, refillable
		201025		JUMO tecLine Rd - redox combination electrodes with liquid KCl filling, refillable
			(2)	**Basic type extension**
x	x	76		Glass shaft, KCl liquid electrolyte, cartridge-style conduction system
			(3)	**Active component**
x		18		UW glass, pH 0 - 12 (briefly 14), -5 to +80 °C
o		11		C glass, pH 0 - 12, -5 to +50 °C
o		12		HT glass, pH 0 - 14, 0 to 135 °C (also for high-alkaline use)
o		14		DS glass, pH 0 - 12, 0 to 80 °C (can be sterilized for 20 minutes at 135 °C)
	x	22		Platinum tip, redox range ±2000 mV, -5 to +90 °C
	o	32		Gold tip, redox range ±2000 mV, -5 to +90 °C
			(4)	**Diaphragm**
x	x	07		1× zirconium dioxide diaphragm (special ceramic)
o	o	09		3× zirconium dioxide diaphragm (special ceramic)
			(5)	**Connection**
x	x	22		Pg13.5 screw head
			(6)	**Fitting length**
o	o	120		120 mm (standard)
x	x	180		Effective fitting length 120 mm, but glass length 180 mm[a]
			(7)	**Extra code**
o	o	000		None
x		833		Applicable for KCl connection[b]

[a] Only in conjunction with extra code 833.
[b] Only in conjunction with fitting length 180 mm.

x = as standard
o = option

	(1)		(2)		(3)		(4)		(5)		(6)		(7)
Order code		/		-		-		-		-		/	
Order example	201020	/	76	-	18	-	07	-	22	-	120	/	000

Note:
The type code is not a modular system.
If possible, choose items listed under **"stock versions"** or **"production versions"** for your orders.
We will have to technically inspect and approve a free combination of individual key features.

JUMO GmbH & Co. KG
Delivery address: Mackenrodtstraße 14
36039 Fulda, Germany
Postal address: 36035 Fulda, Germany
Phone: +49 661 6003-0
Fax: +49 661 6003-607
Email: mail@jumo.net
Internet: www.jumo.net

JUMO Instrument Co. Ltd.
JUMO House
Temple Bank, Riverway
Harlow, Essex CM 20 2DY, UK
Phone: +44 1279 63 55 33
Fax: +44 1279 62 50 29
Email: sales@jumo.co.uk
Internet: www.jumo.co.uk

JUMO Process Control, Inc.
6733 Myers Road
East Syracuse, NY 13057, USA
Phone: +1 315 437 5866
Fax: +1 315 437 5860
Email: info.us@jumo.net
Internet: www.jumousa.com

pH production versions

(delivery 10 working days after receipt of order)

Type	Brief description	Part no.
201020/76-18-09-22-180/833	Glass shaft, KCl liquid electrolyte, 3× zirconium dioxide diaphragm, fitting length 180 mm	00373964
201020/76-12-07-20-120/000	Glass shaft, KCl liquid electrolyte, zirconium dioxide diaphragm, hose olive with Pg13.5 threaded coupling cemented with putty, 120 mm	00300160

Redox production versions

(delivery 10 working days after receipt of order)

Type	Brief description	Part no.
201025/76-22-07-22-180/833	Glass shaft, KCl liquid electrolyte, 1× zirconium dioxide diaphragm, fitting length 180 mm	00303849

Accessories

Type	Part no.
KCl connection (PG 209791)	00475617
KCl storage vessel, pressure-resistant, for wall mounting for construction an electrolyte bridge or when using electrodes filled with KCl (PG 209791)	00060254
3-molar KCl solution, 5 × 250 ml pack unit (also see data sheet 201090) (PG 202950)	00306215

JUMO GmbH & Co. KG
Delivery address: Mackenrodtstraße 14
36039 Fulda, Germany
Postal address: 36035 Fulda, Germany
Phone: +49 661 6003-0
Fax: +49 661 6003-607
Email: mail@jumo.net
Internet: www.jumo.net

JUMO Instrument Co. Ltd.
JUMO House
Temple Bank, Riverway
Harlow, Essex CM 20 2DY, UK
Phone: +44 1279 63 55 33
Fax: +44 1279 62 50 29
Email: sales@jumo.co.uk
Internet: www.jumo.co.uk

JUMO Process Control, Inc.
6733 Myers Road
East Syracuse, NY 13057, USA
Phone: +1 315 437 5866
Fax: +1 315 437 5860
Email: info.us@jumo.net
Internet: www.jumousa.com

JUMO tecLine PRO pH/Rd

pH and redox combination electrodes

201020 series - pH electrodes
201025 series - redox electrodes

(previous designation 2 GE-20-...)



General description

The electrodes of the 201020(25)/79 series are known for their high mechanical and chemical resistance. Thanks to their sturdy PVDF body, there is hardly any risk of the sensor breaking. The electrolyte of these combination electrodes guarantees a stable measurement value, even in critical media containing sulphides.
There is an integrated Pt1000 temperature probe. The electrodes can be manufactured as pH or redox electrodes, subject to the application. An open annular-gap diaphragm is the type of diaphragm used.

Areas of operation

- Chemical industry
- Wastewater treatment
- Sewage treatment works
- Paper industry

JUMO GmbH & Co. KG
Delivery address: Mackenrodtstraße 14
36039 Fulda, Germany
Postal address: 36035 Fulda, Germany
Phone: +49 661 6003-0
Fax: +49 661 6003-607
Email: mail@jumo.net
Internet: www.jumo.net

JUMO Instrument Co. Ltd.
JUMO House
Temple Bank, Riverway
Harlow, Essex CM 20 2DY, UK
Phone: +44 1279 63 55 33
Fax: +44 1279 62 50 29
Email: sales@jumo.co.uk
Internet: www.jumo.co.uk

JUMO Process Control, Inc.
6733 Myers Road
East Syracuse, NY 13057, USA
Phone: +1 315 437 5866
Fax: +1 315 437 5860
Email: info.us@jumo.net
Internet: www.jumousa.com

Dimensions

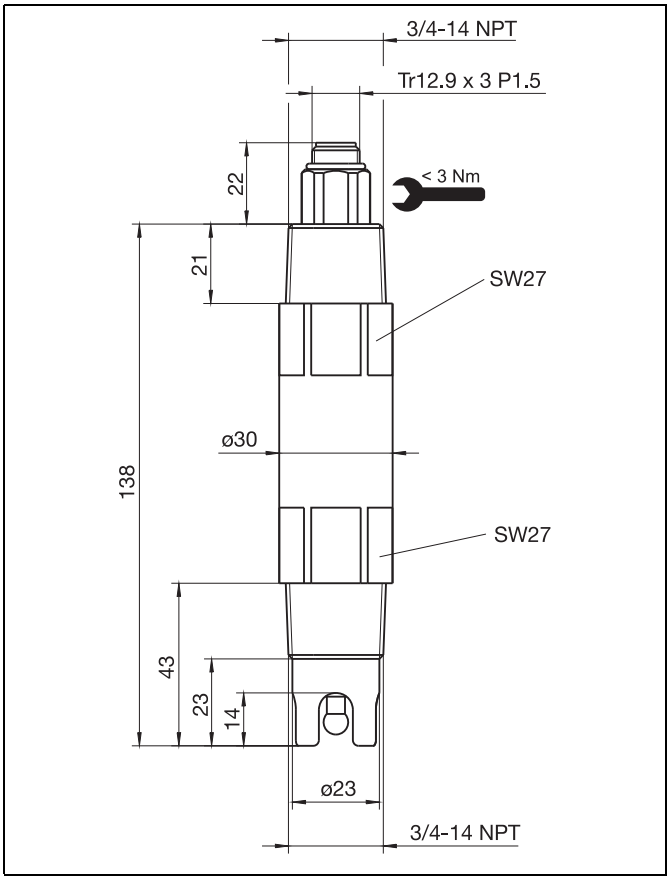

Type 201020/...

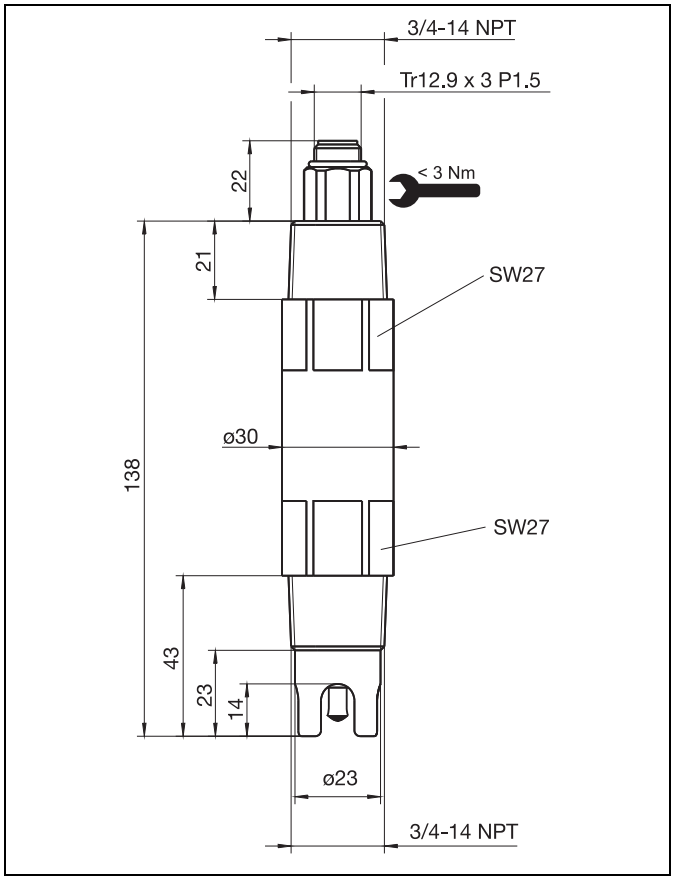

Type 201025/...

JUMO GmbH & Co. KG
Delivery address: Mackenrodtstraße 14
36039 Fulda, Germany
Postal address: 36035 Fulda, Germany
Phone: +49 661 6003-0
Fax: +49 661 6003-607
Email: mail@jumo.net
Internet: www.jumo.net

JUMO Instrument Co. Ltd.
JUMO House
Temple Bank, Riverway
Harlow, Essex CM 20 2DY, UK
Phone: +44 1279 63 55 33
Fax: +44 1279 62 50 29
Email: sales@jumo.co.uk
Internet: www.jumo.co.uk

JUMO Process Control, Inc.
6733 Myers Road
East Syracuse, NY 13057, USA
Phone: +1 315 437 5866
Fax: +1 315 437 5860
Email: info.us@jumo.net
Internet: www.jumousa.com

Order details

			(1)	**Basic type**
		201020		JUMO tecLine PRO pH - pH combination electrodes
		201025		JUMO tecLine PRO Redox - redox combination electrodes
			(2)	**Basic type extension**
x	x	79		Process electrode
			(3)	**Active component**
		12		HT glass, 0 to 110 °C; pH 0 - 14
x		18		UW glass, -5 to +80°C; pH 0 - 12 (briefly pH 14)
o	x	22		Platinum tip, 0 to 110 °C; ±2000 mV
	o	32		Gold tip, 0 to 110 °C; ±2000 mV
			(4)	**Diaphragm**
x	x	10		Annular-gap diaphragm; gel of polymerized solid electrolyte ("diaphragm-free")
			(5)	**Electrical connection**
o	o	18		VP Pg13.5 screw head
x	x	22		screw head
			(6)	**Extra code**
x	x	837		Salt reserve
o		841		Integrated Pt1000

x = as standard
o = option

	(1)		(2)		(3)		(4)		(5)		(6)
Order code											
Order example	201020	/	79	-	12	-	10	-	22	-	841

Note:
The type code is not a modular system.
If possible, choose items listed under **"stock versions"** or **"production versions"** for your orders.
We will have to technically inspect and approve a free combination of individual key features.

pH production versions

(delivery 10 working days after receipt of order)

Type	Brief description	Part no.
201020/79-18-10-22/837	UW glass, screw head, solid electrolyte, annular-gap diaphragm, salt reserve	00468999
201020/79-12-10-22/837	HT glass, screw head, solid electrolyt, annular-gap diaphragm, salt reserve	00469853

Accessories

Type	Part no.
Connecting cable VP screw head, 5 m, type 202990/11-95-5-11	00372919
Connecting cable VP screw head, 10 m, type 202990/11-95-10-11	00373029