X20(c)DO4649

Data sheet
2.30 (September 2024)



Translation of the original documentation

Publishing information

B&R Industrial Automation GmbH

B&R Strasse 1

5142 Eggelsberg

Austria

Telephone: +43 7748 6586-0

Fax: +43 7748 6586-26

office@br-automation.com

Disclaimer

All information in this document is current as of its creation. The contents of this document are subject to change without notice. B&R Industrial Automation GmbH assumes unlimited liability in particular for technical or editorial errors in this document only (i) in the event of gross negligence or (ii) for culpably inflicted personal injury. Beyond that, liability is excluded to the extent permitted by law. Liability in cases in which the law stipulates mandatory unlimited liability (such as product liability) remains unaffected. Liability for indirect damage, consequential damage, business interruption, loss of profit or loss of information and data is excluded, in particular for damage that is directly or indirectly attributable to the delivery, performance and use of this material.

B&R Industrial Automation GmbH notes that the software and hardware designations and brand names of the respective companies used in this document are subject to general trademark, brand or patent protection.

Hardware and software from third-party suppliers referenced in this document is subject exclusively to the respective terms of use of these third-party providers. B&R Industrial Automation GmbH assumes no liability in this regard. Any recommendations made by B&R Industrial Automation GmbH are not contractual content, but merely non-binding information for which no liability is assumed. When using hardware and software from third-party suppliers, the relevant user documentation of these third-party suppliers must additionally be consulted and, in particular, the safety guidelines and technical specifications contained therein must be observed. The compatibility of the products from B&R Industrial Automation GmbH described in this document with hardware and software from third-party suppliers is not contractual content unless this has been separately agreed in individual cases; in this respect, warranty for such compatibility is excluded in any case, and it is the sole responsibility of the customer to verify this compatibility in advance.

Version history

B&R makes every effort to keep documents as current as possible. The most current versions are available for download on the B&R website (www.br-automation.com).

1 General information

1.1 Other applicable documents

For additional and supplementary information, see the following documents.

Other applicable documents

Document name	Title
MAX20	X20 System user's manual
MAEMV	Installations / EMV guide

1.2 Coated modules

Coated modules are X20 modules with a protective coating for the electronics component. This coating protects X20c modules from condensation and corrosive gases.
The modules' electronics are fully compatible with the corresponding X20 modules.

For simplification purposes, only images and module IDs of uncoated modules are used in this data sheet.

The coating has been certified according to the following standards:

- Condensation: BMW GS 95011-4, 2x 1 cycle
- Corrosive gas: EN 60068-2-60, method 4, exposure 21 days



1.2.1 Starting temperature

The starting temperature describes the minimum permissible ambient temperature in a voltage-free state at the time the coated module is switched on. This is permitted to be as low as -40°C. During operation, the conditions as specified in the technical data continue to apply.



Information:

It is important to absolutely ensure that there is no forced cooling by air currents in the closed control cabinet, e.g. due to the use of a fan or ventilation slots.

1.3 Order data

Order number	Short description	Figure
	Digital outputs	
X20DO4649	X20 digital output module, 4 relays, normally open contacts, 240 VAC / 5 A	
X20cDO4649	X20 digital output module coated, 4 relays, normally open contacts, 240 VAC / 5 A	
	Required accessories	
	Bus modules	
X20BM11	X20 bus module, 24 VDC keyed, internal I/O power supply connected through	
X20BM15	X20 bus module, with node number switch, 24 VDC keyed, internal I/O power supply connected through	
X20cBM11	X20 bus module, coated, 24 VDC keyed, internal I/O power supply connected through	
	Terminal blocks	
X20TB12	X20 terminal block, 12-pin, 24 VDC keyed	

Table 1: X20DO4649, X20cDO4649 - Order data

1.4 Module description

This module is equipped with 4 relay outputs with normally open contacts for 240 VAC / 30 VDC. The outputs are single-channel isolated.

Functions:

- Digital outputs



Danger!

Risk of electric shock!

The terminal block is only permitted to conduct voltage when it is connected. It is not permitted to be disconnected or connected while voltage is applied or have voltage applied to it while it is removed under any circumstances!

This module is not permitted to be the last module connected on the X2X Link network. At least one subsequent X20ZF dummy module must provide protection against contact.



Danger!

The voltage classes on the terminal block are not permitted to be mixed! Only operation with the mains voltage (e.g. 230 VAC) OR with safety extra-low voltage (e.g. 24 VDC SELV) is permitted.

2 Technical description

2.1 Technical data

Order number	X20DO4649	X20cDO4649
Short description		
I/O module	4 digital outputs 30 VDC / 240 VAC, outputs single-channel isolated	
General information		
B&R ID code	0xA704	0xE67E
Status indicators	I/O function per channel, operating state, module status	
Diagnostics		
Module run/error	Yes, using LED status indicator and software	
Outputs	Yes, using LED status indicator	
Power consumption		
Bus	0.8 W	
Internal I/O	-	
Additional power dissipation caused by actuators (resistive) [W] [1)]	+1.5	
Certifications		
CE	Yes	
UKCA	Yes	
ATEX	Zone 2, II 3G Ex nA nC IIA T5 Gc IP20, Ta (see X20 user's manual) FTZÚ 09 ATEX 0083X	
UL	cULus E115267 Industrial control equipment	
HazLoc	cCSAus 244665 Process control equipment for hazardous locations Class I, Division 2, Groups ABCD, T5	
DNV	Temperature: **B** (0 to 55°C) Humidity: **B** (up to 100%) Vibration: **B** (4 g) EMC: **B** (bridge and open deck)	
CCS	Yes	-
LR	ENV1	
KR	Yes	
ABS	Yes	
BV	**EC33B** Temperature: 5 - 55°C Vibration: 4 g EMC: Bridge and open deck	
KC	Yes	-
Digital outputs		
Variant	Relay / Normally open contact Channels are single-channel isolated.	
Nominal voltage	30 VDC / 240 VAC	
Max. voltage	264 VAC	
Switching voltage	Max. 110 VDC / 264 VAC	
Rated frequency	DC / 45 to 63 Hz	
Nominal output current	5 A at 30 VDC / 5 A at 240 VAC	
Total nominal current	10 A at 30 VDC / 10 A at 240 VAC	
Actuator power supply	External	
Inrush current	Max. 5 A (per channel)	
Contact resistance	Max. 100 mΩ	
Switching delay		
0 → 1	≤10 ms	
1 → 0	≤10 ms	
Insulation voltages		
Channel - Bus	Tested at 2300 VAC	
Channel - Channel	Tested at 750 VAC	
Service life		
Electrical [2)]	Min. 5 x 10^4 ops. (NO) at 5 A	
Mechanical	Min. 2 x 10^7 ops	
Switching capacity		
Minimum	0.05 W / 2.4 VA	
Maximum	150 W / 1250 VA	

Table 2: X20DO4649, X20cDO4649 - Technical data

Order number	X20DO4649	X20cDO4649
Protective circuit		
Internal	None	
External		
AC	RC combination or VDR	
DC	Inverse diode, RC combination or VDR	
Electrical properties		
Electrical isolation	Channel isolated from channel, bus and I/O power supply	
Operating conditions		
Mounting orientation		
Horizontal	Yes	
Vertical	Yes	
Installation elevation above sea level		
0 to 2000 m	No limitation	
>2000 m	Not permitted	
Degree of protection per EN 60529	IP20	
Ambient conditions		
Temperature		
Operation		
Horizontal mounting orientation	-25 to 60°C	
Vertical mounting orientation	-25 to 50°C	
Derating	See section "Derating".	
Starting temperature	-	Yes, -40°C
Storage	-40 to 85°C	
Transport	-40 to 85°C	
Relative humidity		
Operation	5 to 95%, non-condensing	Up to 100%, condensing
Storage	5 to 95%, non-condensing	
Transport	5 to 95%, non-condensing	
Mechanical properties		
Note	Order 1x terminal block X20TB12 separately. Order 1x bus module X20BM11 separately.	Order 1x terminal block X20TB12 separately. Order 1x bus module X20cBM11 separately.
Pitch	12.5$^{+0.2}$ mm	

Table 2: X20DO4649, X20cDO4649 - Technical data

1) Number of outputs x Contact resistance x Nominal output current^2. For a calculation example, see section "Mechanical and electrical configuration" in the X20 system user's manual.
2) With resistive load. See also section "Electrical service life".

2.2 Status LEDs

For a description of the various operating modes, see section "Additional information - Diagnostic LEDs" in the X20 System user's manual.

Figure	LED	Color	Status	Description
	r	Green	Off	Module supply not connected
			Single flash	RESET mode
			Blinking	PREOPERATIONAL mode
			On	RUN mode
	e	Red	Off	Module supply not connected or everything OK
			On	Error or reset status
	e + r	Red on / Green single flash		Invalid firmware
	1 - 4	Orange		Output status of the corresponding digital output

2.3 Pinout

For easy wiring, 4 auxiliary contacts are available on the module starting with revision E0. They are connected together internally and can be loaded with a total of 10 A (see also section "Connection example" on page 7).

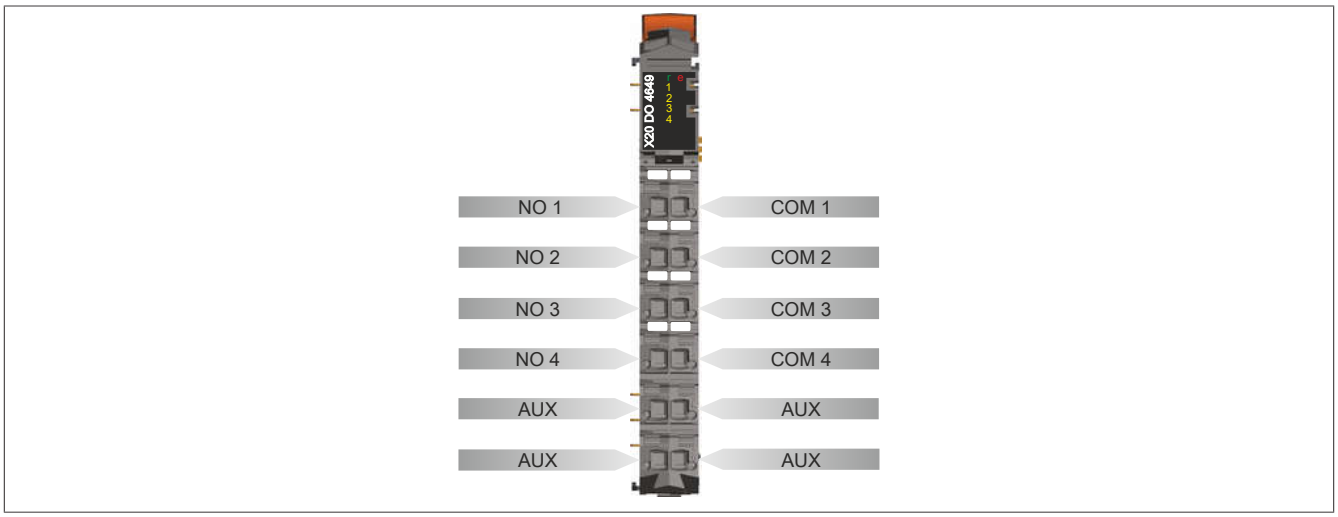

2.4 Connection example

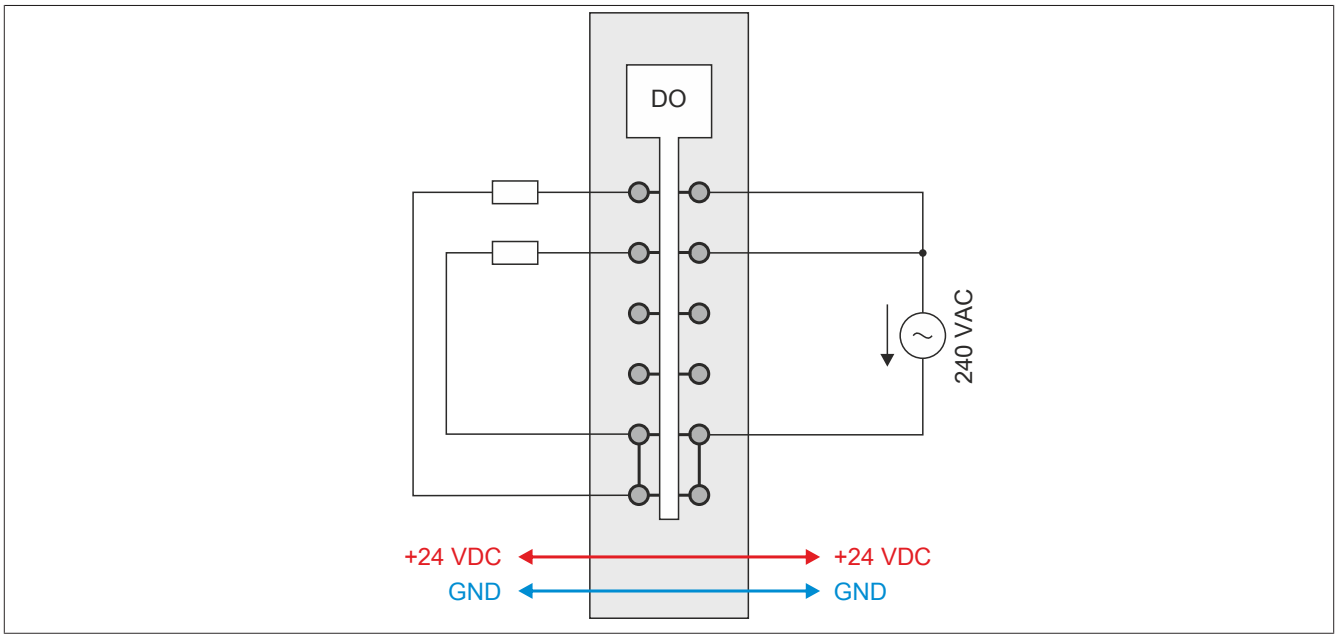

2.5 Output circuit diagram

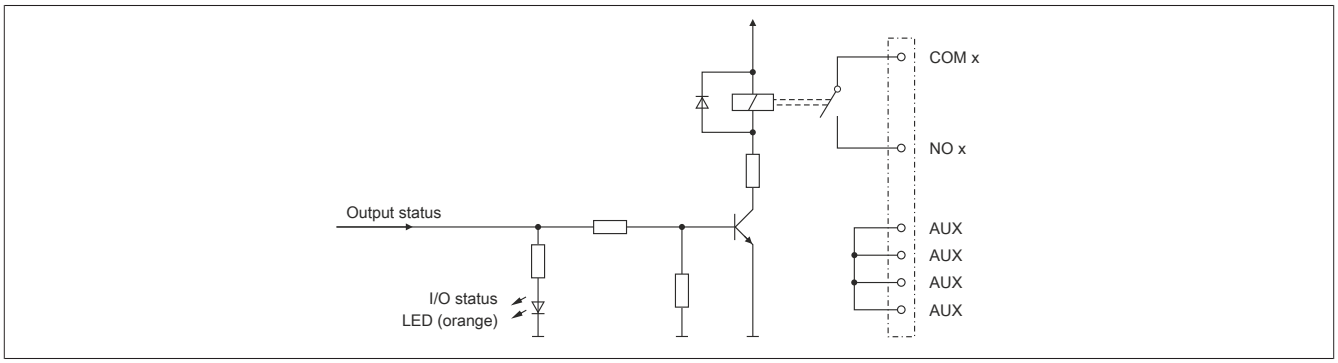

2.6 Electrical service life

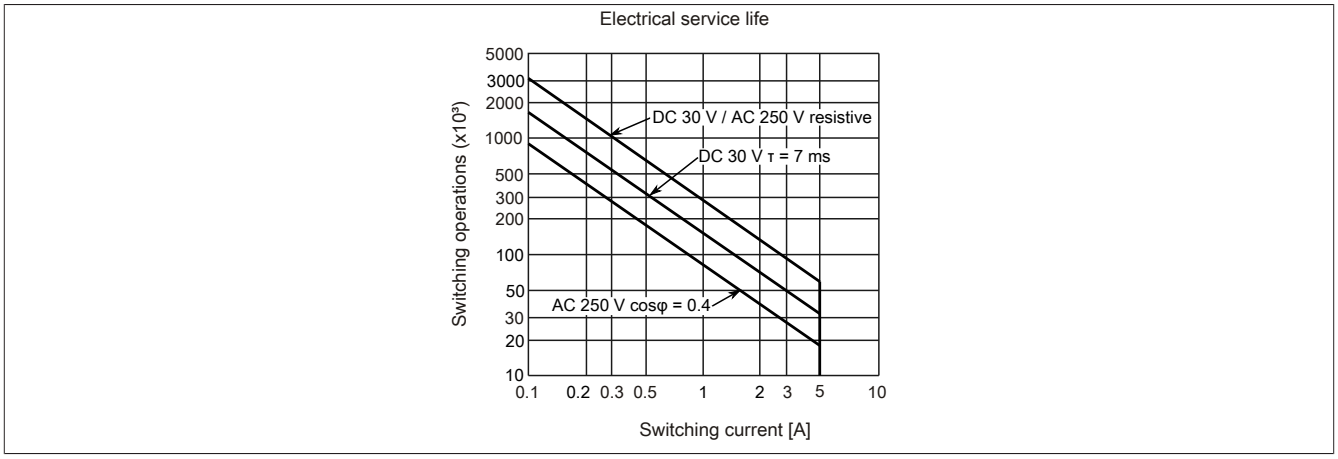

2.7 Derating

There is no derating when operated below 55°C.

When operating above 55°C, the maximum current per channel is reduced to 4 A and the maximum summation current to 8 A!

3 Function description

3.1 Digital outputs

The module is equipped with 4 relay outputs with normally open contacts.

The output state is transferred to the output channels with a fixed offset (<60 µs) in relation to the network cycle (SyncOut).

Packed outputs (only function model 0 - Standard)

Setting "Packed outputs" in the Automation Studio I/O configuration can be used to determine whether all bits of the register should be applied as individual data points in the Automation Studio I/O mapping ("DigitalOutput01 to DigitalOutputxx") or whether the register should be displayed as a single USINT data point ("DigitalOutput").



Information:

The register is described in "Switching state of digital outputs 1 to 4" on page 11.

4 Commissioning

4.1 Using the module on the bus controller

Function model 254 "Bus controller" is used by default only by non-configurable bus controllers. All other bus controllers can use other registers and functions depending on the fieldbus used.

For detailed information, see section "Additional information - Using I/O modules on the bus controller" in the X20 user's manual (version 3.50 or later).

4.1.1 CAN I/O bus controller

The module occupies 1 digital logical slot on CAN I/O.

5 Register description

5.1 General data points

In addition to the registers described in the register description, the module has additional general data points. These are not module-specific but contain general information such as serial number and hardware variant.

General data points are described in section "Additional information - General data points" in the X20 System user's manual.

5.2 Function model 0 - Standard

Register	Fixed offset	Name	Data type	Read		Write	
				Cyclic	Acyclic	Cyclic	Acyclic
2	0	DigitalOutput	USINT			•	
		DigitalOutput01	Bit 0				
		...	...				
		DigitalOutput04	Bit 3				

Fixed modules require their data points to be in a specific order in the X2X frame. Cyclic access occurs according to a predefined offset, not based on the register address.

Acyclic access continues to be based on the register numbers.

5.3 Function model 254 - Bus controller

Register	Offset[1)]	Name	Data type	Read		Write	
				Cyclic	Acyclic	Cyclic	Acyclic
2	0	Switching state of digital outputs 1 to 4	USINT			•	
		DigitalOutput01	Bit 0				
		...	...				
		DigitalOutput04	Bit 3				

1) The offset specifies the position of the register within the CAN object.

5.4 Digital outputs

5.4.1 Switching state of digital outputs 1 to 4

Name:
DigitalOutput
DigitalOutput01 to DigitalOutput04

This register is used to store the switching state of digital outputs 1 to 4.

Data type	Values	Information[1)]
USINT	0 to 15	Packed outputs = On Data point: "DigitalOutput"
	See the bit structure.	Packed outputs = Off or function model ≠ 0 - Standard. Data points: "DigitalOutput01" to "DigitalOutput04"

1) See "Digital outputs" on page 9.

Bit structure:

Bit	Description	Value	Information
0	DigitalOutput01	0	Digital output 01 reset
		1	Digital output 01 set
...		...	
3	DigitalOutput04	0	Digital output 04 reset
		1	Digital output 04 set

5.5 Minimum cycle time

The minimum cycle time specifies how far the bus cycle can be reduced without communication errors occurring. It is important to note that very fast cycles reduce the idle time available for handling monitoring, diagnostics and acyclic commands.

Minimum cycle time
100 µs

5.6 Minimum I/O update time

The minimum I/O update time specifies how far the bus cycle can be reduced so that an I/O update is performed in each cycle.

Minimum I/O update time
Equal to the minimum cycle time