TECHNICAL DATASHEET

Absolute Encoder AD58



- For brushless servo motors
- All-digital and highspeed
- +120°C operating temperature
- 10,000 rpm continuous operation
- Optical encoder with a true geared multiturn
- Interface: SSI, BiSS-B or BiSS-C
- Option Sinewave 1 Vpp: Harmonic distortion less than 1%
- Bandwidth 500 kHz

The AD58 is an absolute encoder with a true geared Multiturn and optical sensing technology: The mechanical design consists of two ball bearings and a flexible torque support. The AD58 is ideally suited for integration into BLDC servo motors for demanding Applications such as CNC precision machining and printing in professional quality. Through its low current consumption the AD58 is contributing to lowering cost of ownership.

Fully digital control loop
The new and completely digital OptoAsic technology enables the transition to a truly digital drive system. The conventional absolute encoders still have analog sine wave signals for the feedback of speed and position data. The AD 58, however, provides fully digital position data up to 22 Bit (Singleturn) and 12 Bit (Multiturn) over the BiSS interface with a variable clock rate up to 10 MHz. This corresponds a singleturn resolution of more than 4 million measured steps.

TECHNICAL DATA
mechanical

Housing diameter	58 mm
Shaft diameter	10 mm (Tapered hollow shaft) 10 mm (Tapered solid shaft) 10 mm / 12 mm (Hollow shaft)
Flange (Mounting of housing)	Tether
Protection class shaft input (EN 60529)	IP40
Protection class housing (EN 60529	IP50
Axial endplay of mounting shaft (hubshaft)	±0.5 mm
Radial runout of mating shaft (hubshaft)	±0.1 mm
Max. speed	10,000 rpm (continuous) 12,000 rpm (short term)
Starting torque typ.	≤ 1 Ncm
Moment of inertia	ca. 3.8 x 10^{-6} kgm^2
Operating temperature	-15 °C ... +120 °C
Storage temperature[1]	-15 °C ... +85 °C
Vibration resistance (DIN EN 60068-2-6)	100 m/s² (10 - 2000 Hz)
Shock resistance (DIN EN 60068-2-27	1000 m/s² (6ms)
Weight	ca. 260 g (ST) / 310 g (MT)
Connection	PCB connector, 12 /14 pole

[1] due to packing

subject to errors and changes

TECHNICAL DATASHEET

Absolute Encoder AD58

TECHNICAL DATA
electrical

Supply voltage	DC 5 V ±10 % or DC 10 - 30 V
Current w/o load typ.	100 mA (ST), 150 mA (MT)
Resolution singleturn	12 - 22 Bit
Resolution multiturn	12 Bit (max. resolution 34 Bit)
Output code	Binary, Gray
Incremental signals	Sine-Cosine 1Vpp
Number of pulses	2048
3dB limiting frequency	500 kHz
Absolute accuracy typ.	±35"
Repeatability typ.	±7"
Parametrization	Resolution, Code type, Direction, Warning, Alarm
Alarm output	Alarm bit (SSI-Option), warning and alarmbit (BiSS)

ELECTRICAL CONNECTIONS

PCB-connector, 12 pole

Mating connector

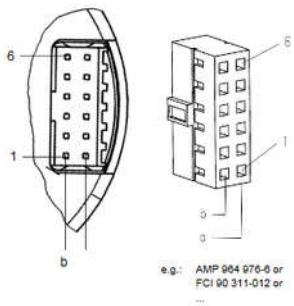

Colour	PIN	Signals
violet	1a	Data/
green	2a	A+
brown/green	3a	0 V Sensor
blue	4a	B+
brown	5a	Clock/
red/blue	6a	5 V Sensor
green/pink	1b	DC 5 V / 7-30 V
white	2b	Clock
red	3b	B-
white/green	4b	0 V (UN)
yellow	5b	A-
black	6b	Data

Colour	PIN	Signals
brown	1a	Data/
yellow	2a	A+
brown/green	3a	0 V Sensor
pink	4a	B+
red	5a	Clock/
violet	6a	5 V Sensor
red/blue	7a	Error/
green/pink	1b	DC 5 V / 7-30 V
black	2b	Clock
blue	3b	B-
grey	4b	0 V (UN)
white/green	5b	A-
green	6b	Data
white	7b	DIR/

PCB-connector, 14 pole

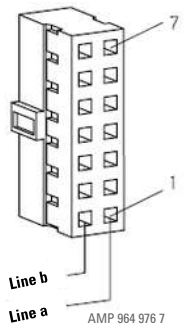

subject to errors and changes

DIMENSIONED DRAWINGS
Tapered solid shaft 1:10

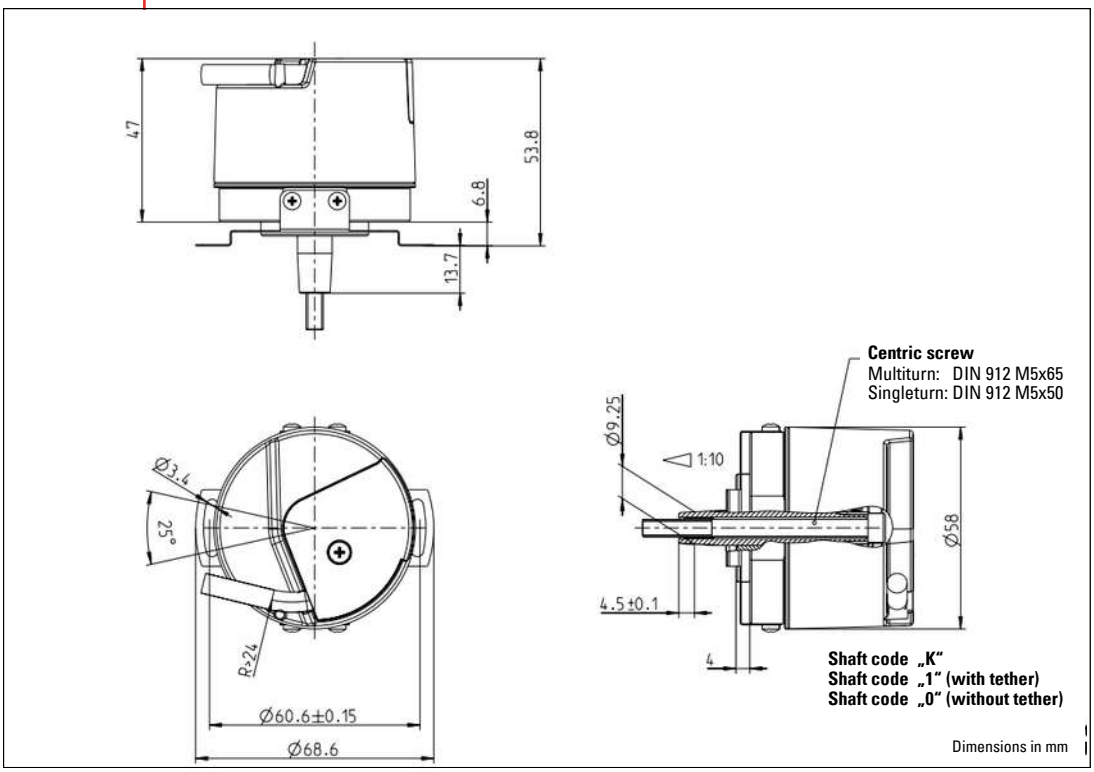

DIMENSIONED DRAWINGS
Hollow shaft (straight)

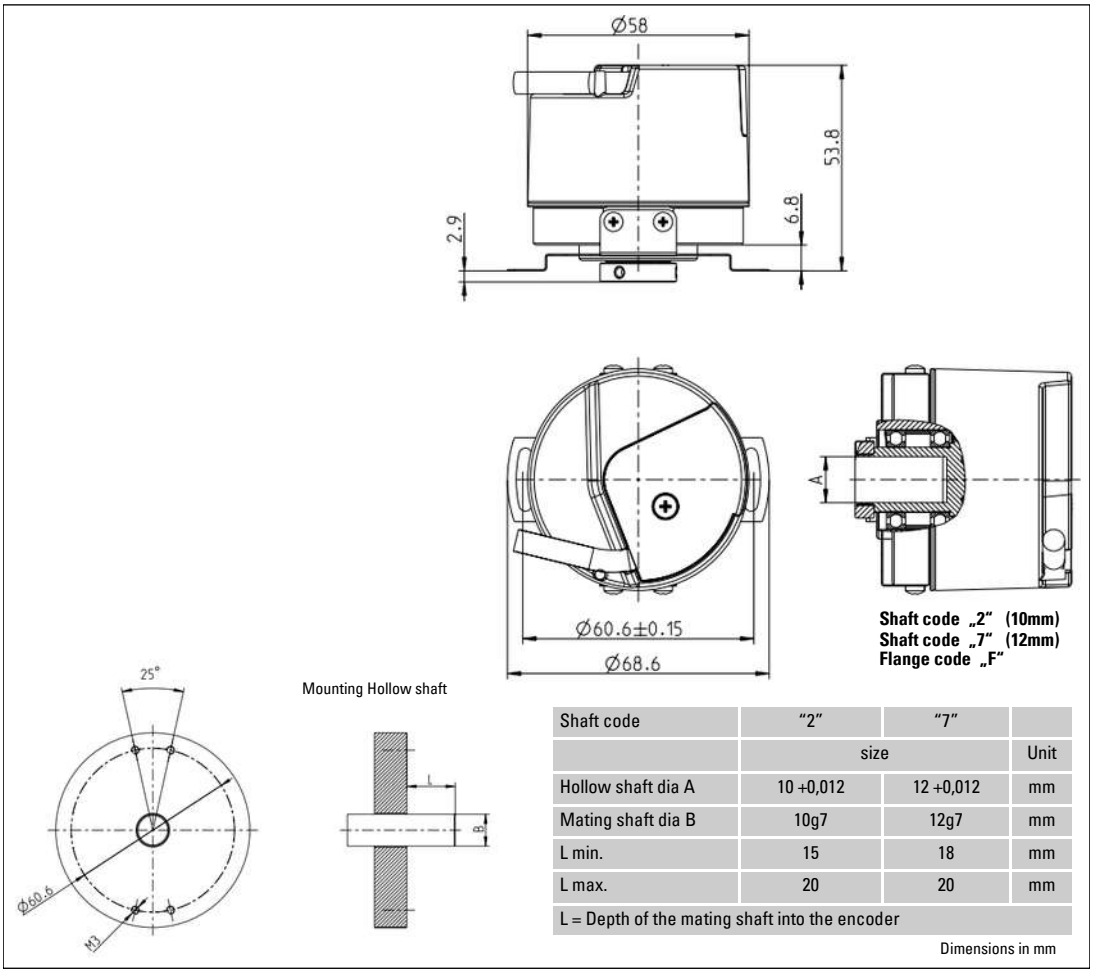

Shaft code	"2"	"7"	
	size		Unit
Hollow shaft dia A	10 +0,012	12 +0,012	mm
Mating shaft dia B	10g7	12g7	mm
L min.	15	18	mm
L max.	20	20	mm
L = Depth of the mating shaft into the encoder			

subject to errors and changes

Absolute Encoder AD58

DIMENSIONED DRAWINGS
Tapered hollow shaft 1:10

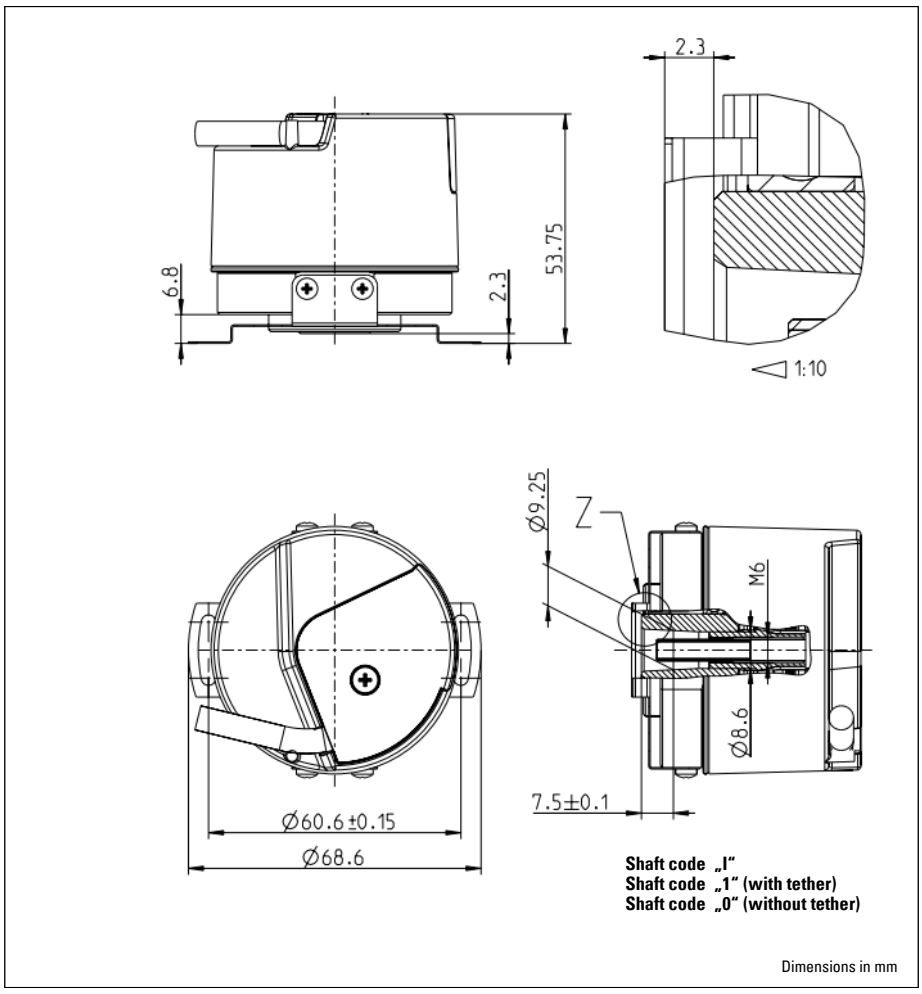

Shaft code „I"
Shaft code „1" (with tether)
Shaft code „0" (without tether)

Dimensions in mm

Absolute Encoder AD58

ORDERING INFORMATION

Type	Resolution	Supply voltage[1]	Flange, Protection, Shaft	Interface	Connection
AD58	**0012** 12 Bit ST **0013** 13 Bit ST **0017** 17 Bit ST **0019** 19 Bit ST **0022** 22 Bit ST **1212** 12 Bit MT + 12 Bit ST **1213** 12 Bit MT + 13 Bit ST **1217** 12 Bit MT + 17 Bit ST **1219** 12 Bit MT + 19 Bit ST **1220** 12 Bit MT + 20 Bit ST **1222** 12 Bit MT + 22 Bit ST Others on request	**A** DC 5 V [2] **E** DC 10-30V	**1.0K** Spring tether, IP40, Tapered solid shaft 1:10 **F.02** Spring tether, IP40, Hollow shaft 10 mm with Clamping ring **F.07** Spring tether, IP40, Hollow shaft 12 mm with Clamping ring	**BC** BISS-B (+ SinCos 1Vpp) **BV** BISS-C (+ SinCos 1Vpp) **SC** SSI Gray (+ SinCos 1Vpp) **SD** SSI Binary (+ SinCos 1Vpp)	**0** PCB Connector, axial, 12-pole **B** PCB Connector, radial, 12-pole, with mating connector + 0,5m cable **1** PCB Connector, axial, 14-pole

[1] The encoder is designed to be connected to a SELV power supply. A connection to a DC voltage network is only permitted with the appropriate protective circuit. A corresponding EMC protective circuit is generally required for cable lengths > 30 m .
[2] With a 5V supply there is no reverse polarity protection

Absolute Encoder AD58

Accessories

CONNECTION CABLE

Article	Length (m)	Part.-Nr.
Cable 12 pole	0,5 m	1 547 049
Cable 14 pole	0,5 m	1 548 003

TETHER

Article	Part.-Nr.
Spring tether (for all Flange types)	E1 547 045

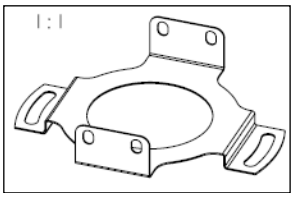

COVER

Article	Part.-Nr.
Cap with screws (Cover)	E1 547 295

