**W1G200-EC87-20**

# EC axial fan - ESM

sickle-shaped blades (S series)

ESM fan housing



**ebm-papst Mulfingen GmbH & Co. KG**
Bachmühle 2 · D-74673 Mulfingen
Phone +49 7938 81-0
Fax +49 7938 81-110
info1@de.ebmpapst.com
www.ebmpapst.com

Limited partnership · Headquarters Mulfingen
Amtsgericht (court of registration) Stuttgart · HRA 590344

General partner Elektrobau Mulfingen GmbH · Headquarters Mulfingen
Amtsgericht (court of registration) Stuttgart · HRB 590142

## Nominal data

| | |
|---|---|
| **Type** | **W1G200-EC87-20** |
| **Motor** | **M1G055-BD** |

| | | | |
|---|---|---|---|
| Phase | | 1~ | 1~ |
| Nominal voltage | VAC | 230 | 230 |
| Frequency | Hz | 50/60 | 50/60 |
| Method of obtaining data | | ml | |
| Speed (rpm) | $min^{-1}$ | 1300 | 900 |
| Power consumption | W | 8 | |
| Current draw | A | 0.07 | |
| Max. back pressure | Pa | 23 | |
| Max. back pressure | inH2O | 0.09 | |
| Min. ambient temperature | °C | -30 | -30 |
| Max. ambient temperature | °C | 50 | 50 |

ml = Max. load · me = Max. efficiency · fa = Free air · cs = Customer specification · ce = Customer equipment
Subject to change

# EC axial fan - ESM

sickle-shaped blades (S series)

ESM fan housing

## Technical description

| | |
|---|---|
| **Weight** | 1 kg |
| **Fan size** | 200 mm |
| **Blade material** | PA plastic |
| **Fan housing material** | PP plastic |
| **Number of blades** | 5 |
| **Airflow direction** | "V" |
| **Direction of rotation** | Counterclockwise, viewed toward rotor |
| **Degree of protection** | IP54; only with suitable plug, to be installed by customer |
| **Insulation class** | "B" |
| **Moisture (F) / Environmental (H) protection class** | H1 |
| **Max. permitted ambient temp. for motor (transport/storage)** | + 80 °C |
| **Min. permitted ambient temp. for motor (transport/storage)** | - 40 °C |
| **Installation position** | Any |
| **Condensation drainage holes** | None |
| **Mode** | S1 |
| **Motor bearing** | Ball bearing |
| **Technical features** | - Thermal overload protection for motor<br>- Soft start<br>- Speed selection max./min. |
| **Speed levels** | 2 |
| **EMC immunity to interference** | According to EN 61000-6-2 (industrial environment) |
| **EMC circuit feedback** | According to EN 61000-3-2/3 |
| **EMC interference emission** | According to EN 61000-6-3 (household environment) |
| **Motor protection** | Thermal overload protector (TOP) internally connected |
| **Protection class** | II |
| **Conformity with standards** | EN 60335-1; EN 60335-2-24; EN 60335-2-80; EN 60335-2-89; CE |
| **Approval** | CSA C22.2 No. 77; UL 1004-3; VDE; EAC |



ebm-papst Mulfingen GmbH & Co. KG · Bachmühle 2 · D-74673 Mulfingen · Phone +49 (0) 7938 81-0 · Fax +49 (0) 7938 81-110 · info1@de.ebmpapst.com · www.ebmpapst.com

# EC axial fan - ESM

sickle-shaped blades (S series)

ESM fan housing

## Product drawing

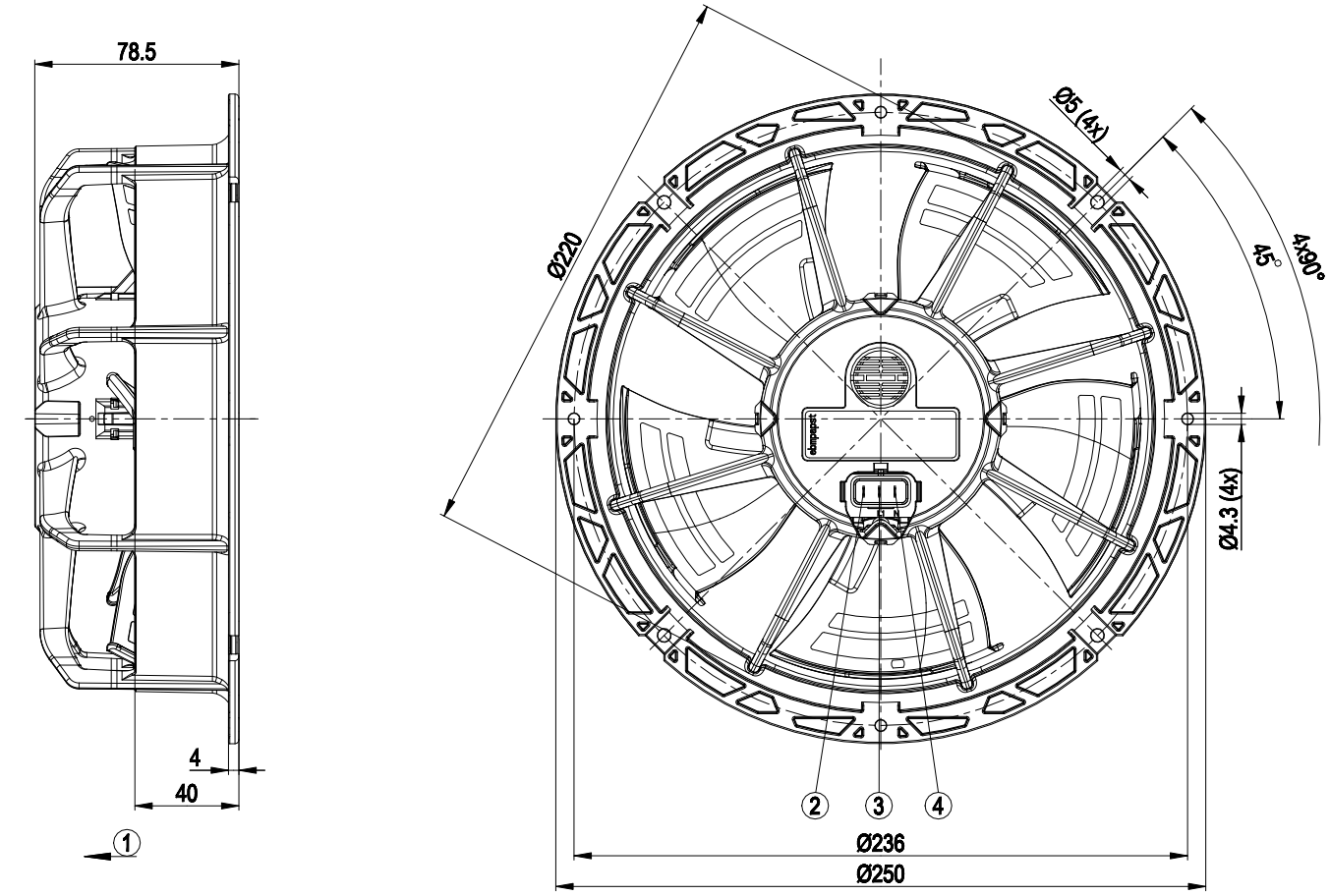


| | |
|---|---|
| 1 | Direction of air flow "V" |
| 2 | Pin S, speed selection (flat plug 2.8 x 0.5) |
| 3 | Pin L1, phase (flat plug 2.8 x 0.5) |
| 4 | Pin N, neutral conductor (flat plug 2.8 x 0.5) |

## Connection diagram

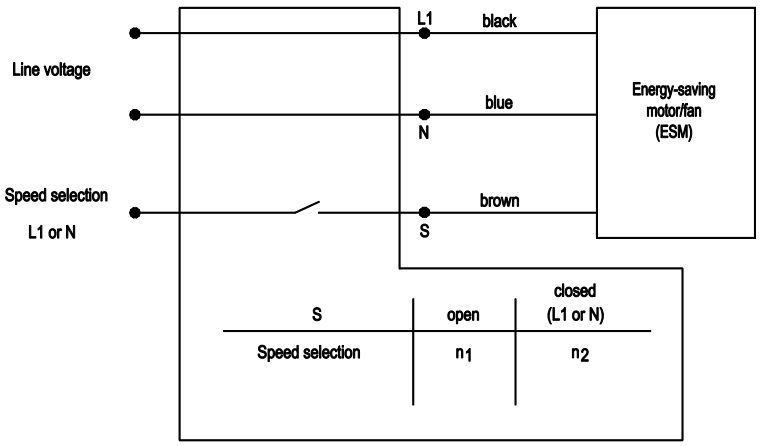




ebm-papst Mulfingen GmbH & Co. KG · Bachmühle 2 · D-74673 Mulfingen · Phone +49 (0) 7938 81-0 · Fax +49 (0) 7938 81-110 · info1@de.ebmpapst.com · www.ebmpapst.com

# EC axial fan - ESM

sickle-shaped blades (S series)

ESM fan housing

## Curves: Air performance 50 Hz

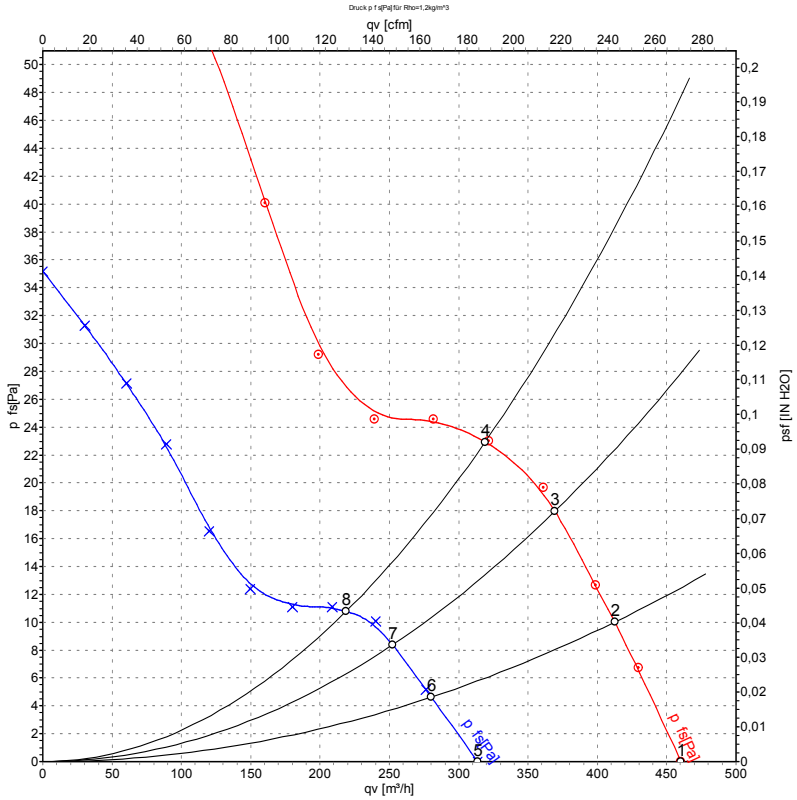


Measurement: LU-113354-1
Measurement: LU-113366-1

Air performance measured according to ISO 5801 installation category A. For detailed information on the measurement setup, contact ebm-papst. Intake sound level: Sound power level according to ISO 13347 / sound pressure level measured at 1 m distance from fan axis. The values given are valid under the specified measuring conditions and may vary due to conditions of installation. For deviations from the standard configuration, the parameters have to be checked on the installed unit.

## Measured values

| | U | f | n | $P_{ed}$ | I | $LpA_{in}$ | $LwA_{in}$ | $q_V$ | $p_{fs}$ | $q_V$ | $p_{fs}$ |
|---|---|---|---|---|---|---|---|---|---|---|---|
| | V | Hz | $min^{-1}$ | W | A | dB(A) | dB(A) | $m^3/h$ | Pa | cfm | inH2O |
| 1 | 230 | 50 | 1300 | 7.0 | 0.06 | 42 | 50 | 460 | 0 | 270 | 0.00 |
| 2 | 230 | 50 | 1300 | 8.0 | 0.07 | 41 | 49 | 410 | 10 | 240 | 0.04 |
| 3 | 230 | 50 | 1300 | 8.0 | 0.07 | 40 | 48 | 370 | 18 | 215 | 0.07 |
| 4 | 230 | 50 | 1300 | 8.0 | 0.07 | 43 | 51 | 320 | 23 | 190 | 0.09 |
| 5 | 230 | 50 | 900 | 3.4 | 0.03 | 33 | 41 | 315 | 0 | 185 | 0.00 |
| 6 | 230 | 50 | 900 | 4.0 | 0.04 | 32 | 41 | 280 | 5 | 165 | 0.02 |
| 7 | 230 | 50 | 900 | 4.1 | 0.04 | 32 | 40 | 250 | 8 | 150 | 0.03 |
| 8 | 230 | 50 | 900 | 4.0 | 0.04 | 32 | 41 | 220 | 11 | 130 | 0.04 |

U = Power supply · f = Frequency · n = Speed (rpm) · $P_{ed}$ = Power consumption · I = Current draw · $LpA_{in}$ = Sound pressure level intake side · $LwA_{in}$ = Sound power level intake side
$q_V$ = Air flow · $p_{fs}$ = Pressure increase



ebm-papst Mulfingen GmbH & Co. KG · Bachmühle 2 · D-74673 Mulfingen · Phone +49 (0) 7938 81-0 · Fax +49 (0) 7938 81-110 · info1@de.ebmpapst.com · www.ebmpapst.com