WIRING DIAGRAMS

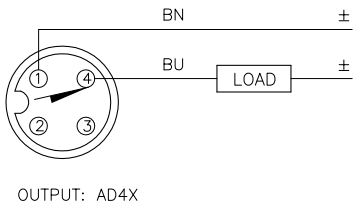

OUTPUT: AD4X

SHORT–CIRCUIT AND OVERLOAD PROTECTED

LOCKNUT LN–M12

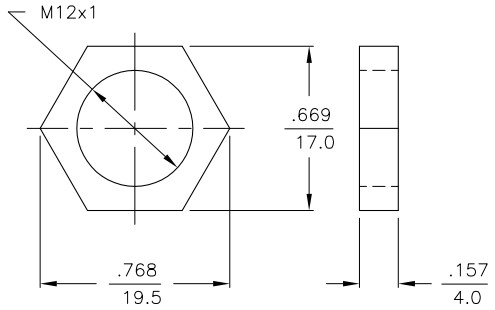

SPECIFICATIONS

RATED OPERATING DISTANCE	2mm = .079"
MOUNTING MODE	FLUSH
TEMPERATURE DRIFT	≤ ±10%
HYSTERESIS	1–15%
MIN. REPEAT ACCURACY	≤ 2%
OPERATING TEMPERATURE	–25°C to +70°C (–13°F to +158°F)
RATED OPERATIONAL VOLTAGE	10–65 VDC
RESIDUAL RIPPLE	≤ 10%
DC RATED OPERATIONAL CURRENT	≤ 100 mA
RESIDUAL CURRENT	≤ 0.6 mA
RATED INSULATION VOLTAGE	≤ 0.5 kV
SHORT–CIRCUIT PROTECTION	YES
MAX. VOLTAGE DROP	≤ 5.0 V
OUTPUT FUNCTION	2–WIRE, NORMALLY OPEN
SMALLEST OPERATING CURRENT	≥ 3.0 mA
MAX. SWITCHING FREQUENCY	≤ 1.0 kHz
HOUSING MATERIAL	METAL, BRASS, CHROME–PLATED
ACTIVE FACE	PLASTIC, PA12–GF20
CONNECTION	M12x1
VIBRATION RESISTANCE	55 Hz (IN ALL 3 PLANES)
SHOCK RESISTANCE	30 g, 11 ms
DEGREE OF PROTECTION	IP67
SWITCHING STATUS INDICATION	LED, YELLOW

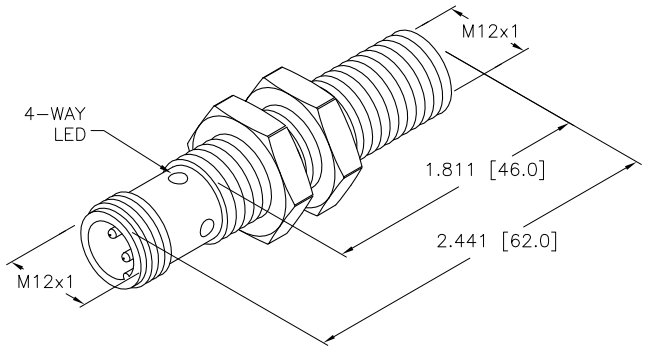

SOURCE DRAWING - FOR REFERENCE ONLY

REV	DESCRIPTION	BY	DATE	ECO NO.
A	DRAWING RELEASE	RDS	12/28/11	

RELATED DOCUMENTS
1.
2.
3.
4.

MATERIAL

FINISH

3RD ANGLE PROJECTION

ALL DIMENSIONS DISPLAYED ON THIS DRAWING ARE FOR REFERENCE ONLY

CONTACT TURCK FOR MORE INFORMATION

THIS DRAWING IS CONFIDENTIAL AND THE PROPERTY OF TURCK INC. USE OF THIS DOCUMENT WITHOUT WRITTEN PERMISSION IS PROHIBITED.

TURCK INC
High Technology Sensors and Automation Controls
3000 CAMPUS DRIVE
MINNEAPOLIS, MN 55441
1–800–544–7769
(763) 553–7300
(763) 553–0708 fax
turck.com

DRFT RDS | DATE 12/28/11
APVD J.M. | SCALE 1=1.0

UNIT OF MEASUREMENT
INCH [MILLIMETER]
DO NOT SCALE THIS DRAWING

DESCRIPTION
BI 2–M12E–AD4X–H1144

IDENTIFICATION NO. T4406591 | REV A

FILE: T4406591 | SHEET 1 OF 1

Approved 12/28/2011, work order #23656 by J.M.