LOW COST TOGGLE FOR WET & DUSTY ENVIRONMENTS

These toggle switches are rugged, high performance sealed switches designed for use under severe conditions found in heavy equipment, industrial control, marine and appliance applications. The T7 series is sealed to both IP68S and IP69K. OTTO's front panel seal is accomplished with an O-ring under the bat handle. However, now a secondary visible bushing seal is offered as an option.

T7 toggles are offered in single and double pole configurations. A choice of models are offered to handle power levels to 16 amps, 0.5HP and low level electronic switching applications.

These toggles feature positive detent action for safe switching operation. In conjunction with the unique OTTO snap-action switch mechanism, the T7 offers non-teasible contact transfer.

High contact pressure and superior contact wiping action of the OTTO design makes the T7 an excellent choice for switching loads from logic level up to 16 amps.

Mounting hardware provided includes two hex nuts, one lockwasher and one keyway washer. An optional panel seal is available, P/N 710196, MIL. P/N M5423/16-01.

Features:

- **Sealed to IP68S and IP69K**
- **Switches up to 16 amps**
- **Withstands extreme shock & vibration**
- **Positive detent, non-teasible contact transfer**
- **2 & 3-position, momentary & maintained action**
- **Choice of terminal styles**
- **UL recognized & CSA certified**
- **RoHS/WEEE/Reach compliant**
- **Black matte finish available. Contact factory.**



Standard Characteristics/Ratings:

ELECTRICAL RATINGS:

Load	Sea Level @ 28VDC or 115VAC	Cycles
Resistive	16A	25,000
Resistive	10A	50,000
Inductive	10A	25,000
Motor	0.5 HP	25,000
DWV	1050Vrms	N/A
Low Level	10mA max @ 30mV max DC Resistive for 50,000 cycles	

Electrical Life:	See Rating Chart
Mechanical Life:	100,000 cycles
Seal:	IP68S and IP69K
Operating Temp Range:	-30°C to +85°C

MATERIALS:

Case:	Thermoplastic
Bushing:	Anodized aluminum alloy
Toggle:	Stainless steel
Terminals:	Brass
Contacts:	Fine silver/silver cadmium oxide
Low Level:	Gold over silver
Terminal Hardware:	6-32 screw when applicable T7 recommended Quick Connect terminals: AMP 60253-2 for 12-16 AWG AMP 42100-2 for 14-18 AWG
Mounting Hardware:	Hex nuts, lockwasher, key way washer

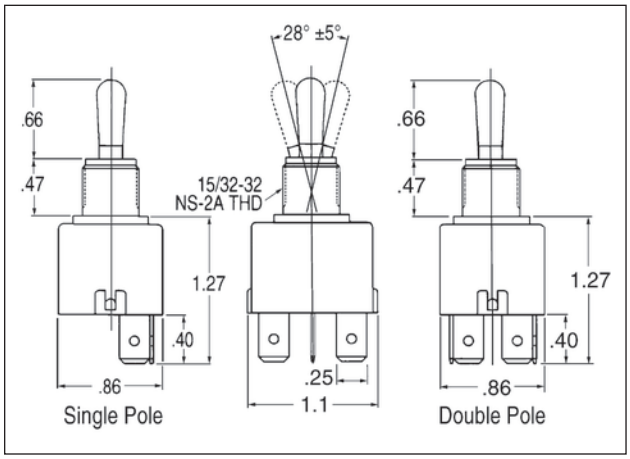

T7 PART NUMBER CODE

T7–X X X X X X

Circuitry
1. 1 Pole
2. 2 Pole

Terminal Style
1. .250" Q.C.
2. Screw
3. Solder
4. PC Pin (consult factory)

Contact Rating
1. Std.
2. Low Level

Circuit Made With Actuator At:

	Keyway Side	Center	Opposite Keyway
A.	ON	NONE	OFF
B.	ON	NONE	ON
C.	(ON)	NONE	OFF
D.	(ON)	NONE	ON
E.	(ON)	OFF	(ON)
F.	ON	OFF	ON
G.	(ON)	OFF	ON
H.	OFF	NONE	ON
J.	OFF	NONE	(ON)
K.	ON	OFF	(ON)

NOTE: ( ) denotes momentary action.

Toggle Style
1. Bat Handle
2. Lever Lockout (consult factory)
3. Dome Button
4. Rocker Button
5. Bat Handle With Bushing Seal

Button Color*
1. Red
2. Black
3. Orange
4. Yellow
5. Green
6. Blue
7. Purple
8. Gray
9. White

* Only applicable to Toggle Styles 3 & 4; otherwise omit.

T7 Connector P/N C801765