ASCO™ SOLENOID VALVE

2/2 NORMALLY CLOSED – PILOT OPERATED - G3/8 ÷ 1

SERIES
L145

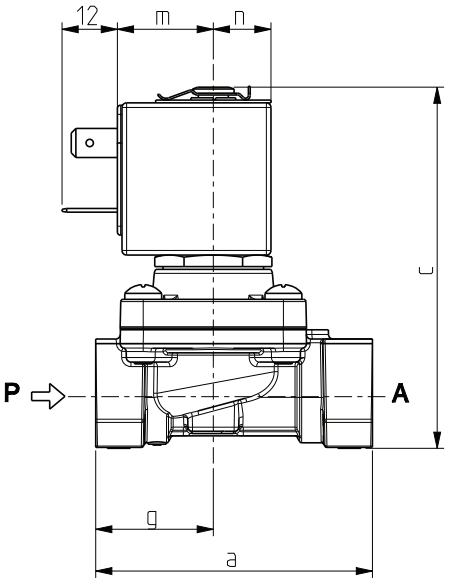



D	a	b	c	e	f	m	n	s	g
G 3/8	60	69	80	25	40	21	12,5	22	25,5
G 1/2	66	72	85	25	40	21	12,5	27	33
G 3/4	79	78	94,5	32	50	27	16	33	39,5
G 1	105	102	123	32	71	27	16	42	46

General Features

Diaphragm valve, pilot operated, having full orifice.
Suitable to shut off liquid and gaseous fluids; particularly suitable to shut off overheated water and steam (verify the compatibility of fluid with materials in contact).

Technical Features	
Maximum allowable pressure (PS)	G3/8 and G1/2: 16 bar G3/4 and G1: 9 bar
Opening time	~100ms
Closing time	from ~500ms to ~1500ms
Fluid temperature	+60°C +170°C
Max viscosity	5°E (~37 cStokes or mm²/s)

Materials in Contact with Fluid	
Body	Brass
Sealing	Reinforced PTFE (Polytetrafluorethylene)
Internal components	Brass and stainless steel
Seat	Stainless steel
Guide assembly	Stainless steel
Shading ring	Copper

Coil		
Continuous duty		ED 100%
Encapsulation material		PET (polyethylene terepthalate) fiberglass reinforced
Insulation class		Z5: H(165°C) – UL - Z6: H(180°C) - UL
Ambient temperature		-10°C +80°C
Electric connections		Z5: DIN 46340 – 3 poles connector (EN175301-803) Z6: DIN 46340 – 3 poles connector
Protection degree		IP 65 (EN 60529) with plug connector
Voltages	AC	24V/50Hz - 110V/50Hz (120V/60Hz) 230V/50Hz (+10% -15%)
		(Other voltages and frequencies on request)

Port size ISO 228	Orifice size (mm)	Differential pressure (bar)					Kv (m^3/h)	Series and type		Power absorption			Sealings	Notes	Weight (lbs)
		Δp min	Δp max					Valve	Coil	AC (VA)		DC (W)			
			Gases		Liquids					Inrush	Holding				
			AC	DC	AC	DC									
G 3/8	10	0,4	8	-	8	-	2	**L145R2**	**Z614A**	16	10	-	reinforced PTFE	1	0,360
G 1/2							2,5								0,415
G 3/4	16		6		6		4,5	**L145R4**	**Z534A**	23	14				0,760
G1	18,5						8,5	**L145R2**							1,365

Notes

- Sealings : PTFE = Polytetrafluorethylene (reinforced)

1 - On request Z610A or Z530A coil, encapsulated in PET (Polyethylene terephtalate) class “F” (+155°C): maximum fluid temperature +100°C, maximum ambient temperature +60°C.

0411/1703

ASCO™ SOLENOID VALVE

2/2 NORMALLY CLOSED – PILOT OPERATED - G3/8 ÷ 1

Spare Parts

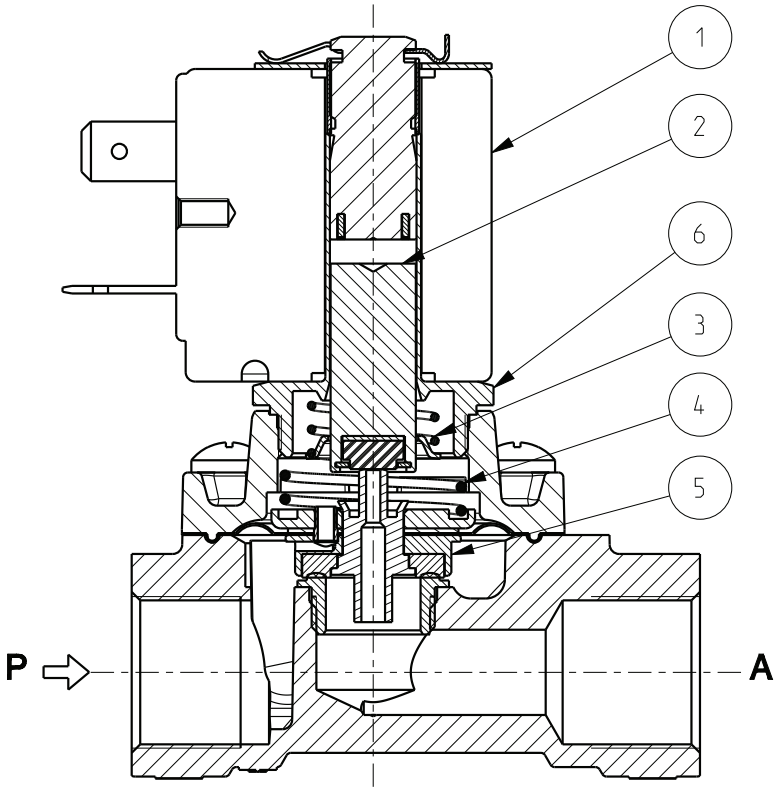

Kit description	Port Size	Kit P.N.	Consisting of:
Core kit	G3/8 – G1/2	G2641702	Core pos. 2 Core return spring pos. 3
	G3/4 – G1	G2665102	
Diaphragm assembly kit	G3/8 – G1/2	G2647501	Diaphragm assembly pos. 5 Spring on diaphragm pos. 4
	G3/4	G2653301	
	G1	G2665201	
Spring on diaphragm kit	G3/8 – G1/2	G2635301	N. 10 springs on diaphragm pos. 4
	G3/4	G2641501	
	G1	G2662201	
Core return spring kit	G3/8 – G1/2	G2651301	N.10 core return spring pos. 3
	G3/4 – G1	G2555101	
Guide pipe assembly kit	G3/8 – G1/2	G3153001	Guide pipe assembly pos. 6 Coil clip
	G3/4 – G1	G3153002	
Coil	G3/8 – G1/2	Z614A	Coil pos. 1
	G3/4 – G1	Z534A	

Installation

- Solenoid valve can be mounted in any position; vertical with coil upwards preferred.

THE VALIDITY OF REPORTED DATA IS REFERRED TO THE DATE OF ISSUE. POSSIBLE UPDATES ARE AVAILABLE ON REQUEST