1 General information

- Clearly structured, straightforward implementation via network-based safety technology
- Modular expandability through virtual wiring
- Immediate triggering of safety function due to short cycle times
- Easy implementation with transparent control and status information, even in the standard application
- Compact design

2 Order data

Order number	Short description	Figure
	Cold plate or feed-through mounting	
8BVI0660HCSS.008-4	ACOPOSmulti3 SafeMOTION EnDat 2.2 Gen2 inverter module, 66 A, AS, cold plate or pass-through mounting, optimized for applications with decentralized, computationally intensive open-loop and closed-loop control requirements	
	Required accessories	
	Terminal block sets	
8BZVI1650SS.000-1A	Screw clamp terminal block set for ACOPOSmulti 8BVI0660HxSS, 8BVI0880HxSS, 8BVI1650HxSS, 8BVI0660HxSA, 8BVI0880HxSA and 8BVI1650HxSA modules: 1x 8TB2104.203L-00, 1x 8TB2108.2010-00	
	Optional accessories	
	Accessory sets	
8BXB000.0000-00	ACOPOSmulti accessory set for encoder buffering consisting of: 1x battery AA 3.6 V, 1x protective cover for battery holder	
	Fan modules	
8BXF001.0000-00	ACOPOSmulti fan module, replacement fan for ACOPOSmulti modules (8BxP/8B0C/8BVI/8BVE/8B0K)	
	Plug-in modules	
8BAC0120.000-1	ACOPOSmulti plug-in module, EnDat 2.1 interface	
8BAC0120.001-2	ACOPOSmulti plug-in module, EnDat 2.2 interface	
8BAC0121.000-1	ACOPOSmulti plug-in module, HIPERFACE interface	
8BAC0122.000-1	ACOPOSmulti plug-in module, resolver interface 10 kHz	
8BAC0123.000-1	ACOPOSmulti plug-in module, incremental encoder and SSI absolute encoder interface for RS422 signals	
8BAC0123.001-1	ACOPOSmulti plug-in module, incremental encoder interface for 5 V single-ended and 5 V differential signals	
8BAC0123.002-1	ACOPOSmulti plug-in module, incremental encoder interface for 24 V single-ended and 24 V differential signals	
8BAC0124.000-1	ACOPOSmulti plug-in module, SinCos interface	
8BAC0125.000-1	ACOPOSmulti plug-in module, SinCos EnDat 2.1/SSI/BiSS interface	
8BAC0130.000-1	ACOPOSmulti plug-in module, 2 digital outputs, 50 mA, max. 62.5 kHz, 2 digital outputs, 500 mA, max. 1.25 kHz, 2 digital inputs 24 VDC	
8BAC0130.001-1	ACOPOSmulti plug-in module, 2 digital outputs, 50 mA, max. 62.5 kHz, 4 digital outputs, 500 mA, max 1.25 kHz	
8BAC0132.000-1	ACOPOSmulti plug-in module, 4 analog inputs ±10 V	
8BAC0133.000-1	ACOPOSmulti plug-in module, 3 RS422 outputs for ABR encoder emulation, 1 MHz	
	POWERLINK/Ethernet cables	
X20CA0E61.00020	POWERLINK/Ethernet connection cable, RJ45 to RJ45, 0.2 m	
X20CA0E61.00025	POWERLINK/Ethernet connection cable, RJ45 to RJ45, 0.25 m	
X20CA0E61.00030	POWERLINK/Ethernet connection cable, RJ45 to RJ45, 0.3 m	
X20CA0E61.00035	POWERLINK/Ethernet connection cable, RJ45 to RJ45, 0.35 m	
X20CA0E61.00050	POWERLINK/Ethernet connection cable, RJ45 to RJ45, 0.5 m	
X20CA0E61.00100	POWERLINK/Ethernet connection cable, RJ45 to RJ45, 1 m	
	Shield component sets	
8SCS001.0000-00	ACOPOSmulti shield component set: 1x shield plate 4x type 1, 1x hose clamp, B 9 mm, D 12-22 mm	
8SCS002.0000-00	ACOPOSmulti shield component set: 1x clamping plate, 2x clamp D 4-13.5 mm, 2x screws	
8SCS003.0000-00	ACOPOSmulti shield component set: 1x shield mounting plate 4x 45°, 8x screws	
8SCS004.0000-00	ACOPOSmulti shield component set: 1x shield plate 4x type 0, 2x hose clamps, B 9 mm, D 32-50 mm	
8SCS010.0000-00	ACOPOSmulti shield component set: 1x ACOPOSmulti holding plate SK14-20, 1x shield connection clamp SK20	
	Terminal blocks	
8TB2104.203L-00	4-pin screw clamp terminal block, 1-row, pitch: 5.08 mm, label 3: T- T+ B- B+, coding L: 1010	
8TB2106.2010-00	6-pin screw clamp terminal block, 1-row, pitch: 5.08 mm, label 1: Numbered consecutively	
8TB2106.2210-00	Push-in terminal block 6-pin, 1-row, spacing: 5.08 mm, label 1: numbered consecutively	
8TB2108.2010-00	8-pin screw clamp terminal block, 1-row, pitch: 5.08 mm, label 1: Numbered consecutively	

Table 1: 8BVI0660HCSS.008-4 - Order data

3 Technical data

Order number	8BVI0660HCSS.008-4
General information	
B&R ID code	0x2FDD
System requirements	
Automation Studio	4.6.1.x or later
mapp Technology Package	mapp Safety 5.24.0 or later
Support	
Dynamic node allocation (DNA)	Yes
Cooling and mounting type	Cold plate or pass-through mounting
Slots for plug-in modules	2 [1]
Certifications	
CE	Yes
UKCA	Yes
Functional safety [2]	Yes (openSAFETY)
UL	cULus E225616 Power conversion equipment
KC	Yes
DC bus connection	
Voltage	
Nominal	750 VDC
Continuous power consumption [3]	48.8 kW
Power dissipation depending on switching frequency [4]	
Switching frequency 5 kHz	In preparation
Switching frequency 10 kHz	In preparation
Switching frequency 20 kHz	In preparation
DC bus capacitance	1980 µF
Variant	ACOPOSmulti backplane
24 VDC power supply	
Input voltage	25 VDC ±1.6%
Input capacitance	32.9 µF
Max. power consumption	33 W + P_{SMC1} + P_{SLOT2} + $P_{24\ V\ Out}$ + $P_{HoldingBrake}$ [5]
Variant	ACOPOSmulti backplane
24 VDC output	
Quantity	2
Output voltage	
DC bus voltage (U_{DC}): 260 to 315 VDC	25 VDC * (U_{DC}/315)
DC bus voltage (U_{DC}): 315 to 800 VDC	24 VDC ±6%
Fuse protection	250 mA (slow-blow) electronic, automatic reset
Motor connection [6]	
Quantity	1
Continuous power per motor connection [3]	48 kW
Continuous current per motor connection [3]	66 A_{eff}
Reduction of continuous current depending on switching frequency and mounting type [7]	
Switching frequency 5 kHz	
Cold plate mounting [8]	1.9 A/K (starting at 58°C) [9]
Pass-through mounting	1.82 A/K (starting at 40°C) [9]
Switching frequency 10 kHz	
Cold plate mounting [8]	1.36 A/K (starting at 27°C) [10]
Pass-through mounting	0.88 A/K (starting at -12°C) [11]
Switching frequency 20 kHz	
Cold plate mounting [8]	0.75 A/K (starting at -37°C) [10]
Pass-through mounting	0.54 A/K (starting at -106°C) [11]
Reduction of continuous current depending on installation elevation	
Starting at 500 m above sea level	6.6 A_{eff} per 1000 m
Peak current	132 A_{eff}
Nominal switching frequency	5 kHz
Possible switching frequencies [12]	5 / 10 / 20 kHz
Insulation stress of the connected motor per IEC TS 60034-25:2004 [13]	Limit value curve A [14]
Protective measures	
Overload protection	Yes
Short-circuit and ground fault protection	Yes
Max. output frequency	598 Hz [15]
Variant	
U, V, W, PE	M8 threaded bolts
Shield connection	Yes
Connection cross section range	
Flexible and fine-stranded wires	--- [16]

Table 2: 8BVI0660HCSS.008-4 - Technical data

Order number	8BVI0660HCSS.008-4
Terminal cable cross section dimension of shield connection	12 to 50 mm [17]
Max. motor line length depending on switching frequency	
Switching frequency 5 kHz	25 m
Switching frequency 10 kHz	25 m
Switching frequency 20 kHz	25 m
Motor holding brake connection	
Quantity	1
Output voltage [18]	24 VDC +5.8% / -0.5% [19]
Continuous current per connection	4.2 A
Max. internal resistance	0.15 Ω
Extinction potential	Approx. 30 V
Max. extinction energy per switching operation	3 Ws
Max. switching frequency	0.5 Hz
Protective measures	
Overload and short-circuit protection	Yes
Open-circuit monitoring	Yes
Undervoltage monitoring	Yes
Response threshold for open-circuit monitoring	Approx. 0.5 A
Response threshold for undervoltage monitoring	24 VDC -2% / -4%
Encoder interfaces [20]	
Quantity	1
Type	EnDat 2.2 [21]
Connections	9-pin female DSUB connector
Status indicators	UP/DN LEDs
Electrical isolation	
Encoder - ACOPOSmulti	No
Encoder monitoring	Yes
Max. encoder cable length	100 m Depends on the cross section of the power supply wires in the encoder cable [22]
Encoder power supply	
Output voltage	Typ. 12.5 V
Load capacity	350 mA
Protective measures	
Short-circuit proof	Yes
Overload-proof	Yes
Synchronous serial interface	
Signal transmission	RS485
Data transfer rate	6.25 Mbit/s
Max. power consumption per encoder interface	$P_{SMC}[W] = 19\ V * I_{Encoder}[A]$ [23]
Trigger inputs	
Quantity	2
Circuit	Sink
Electrical isolation	
Input - Inverter module	Yes
Input - Input	Yes
Input voltage	
Nominal	24 VDC
Maximum	30 VDC
Switching threshold	
Low	<5 V
High	>15 V
Input current at nominal voltage	Approx. 10 mA
Switching delay	
Rising edge	52 µs ±0.5 µs (digitally filtered)
Falling edge	53 µs ±0.5 µs (digitally filtered)
Modulation compared to ground potential	Max. ±38 V
Temperature sensor connection	
Quantity	1
Resistance range	500 Ω to 5 kΩ
Support	
Motion system	
mapp Motion	5.24.1 and higher
ACP10/ARNC0	5.24.1 and higher
Electrical properties	
Discharge capacitance	0.44 µF
Operating conditions	
Permissible mounting orientations	
Hanging vertically	Yes
Horizontal, face up	Yes
Standing horizontally	No

Table 2: 8BVI0660HCSS.008-4 - Technical data

Order number	8BVI0660HCSS.008-4
Installation elevation above sea level	
Nominal	0 to 500 m
Maximum [24]	4000 m
Pollution degree per EN 61800-5-1	2 (non-conductive pollution)
Overvoltage category per EN 61800-5-1	III
Degree of protection per EN 60529	IP20 [25]
Ambient conditions	
Temperature	
Operation	
Nominal	5 to 40°C
Maximum	55°C
Storage	-25 to 55°C
Transport	-25 to 70°C
Relative humidity	
Operation	5 to 85%
Storage	5 to 95%
Transport	Max. 95% at 40°C
Mechanical properties	
Dimensions [26]	
Width	213.5 mm
Height	317 mm
Depth	
Cold plate	212 mm
Pass-through mounting	209 mm
Weight	Approx. 7.75 kg
Module width	4

Table 2: 8BVI0660HCSS.008-4 - Technical data

1) SLOT 2 is available. SLOT 1 of the ACOPOSmulti module is occupied by the SafeMOTION module.
2) Achievable safety classifications (safety integrity level, safety category, performance level) are documented in the user's manual (section "Safety technology").
3) Valid under the following conditions: 750 VDC DC bus voltage, 5 kHz switching frequency, 40°C ambient temperature, installation elevation <500 m above sea level, no derating due to cooling type.
4) I_M ... Current on motor connection X5A [A_{eff}]
5) P_{SMC1} ... Max. power consumption P_{SMC} [W] of the SafeMOTION module in SLOT1 (see section "Encoder interfaces").
   P_{SLOT2} ... Max. power consumption P_{8BAC} [W] of the plug-in module in SLOT2 (see the technical data for the respective plug-in module).
   $P_{24\ V\ Out}$ ... Power [W] that is output to connections X2/+24 V Out 1 and X2/+24 V Out 2 on the module (max. 10 W).
6) Only B&R 8BCM motor cables are permitted to be used for wiring the motor connections!
7) Valid under the following conditions: 750 VDC DC bus voltage, minimum permissible coolant flow volume (3 l/min).
8) The temperature specifications refer to the return temperature of the cold plate mounting plate.
9) Value for the nominal switching frequency.
10) The module cannot supply the full continuous current at this switching frequency. This unusual value for the return temperature, at which derating of the continuous current must be taken into account, ensures that the derating of the continuous current can be determined in the same manner as at other switching frequencies.
    Caution! Condensation can occur at low flow temperatures and return temperatures.
11) The module cannot supply the full continuous current at this switching frequency. This unusual value for the ambient temperature, at which derating of the continuous current must be taken into account, ensures that the derating of the continuous current can be determined in the same manner as at other switching frequencies.
12) B&R recommends operating the module at its nominal switching frequency. Operating the module at a higher switching frequency for application-specific reasons reduces the continuous current and increases CPU utilization.
13) If necessary, the stress of the motor isolation system can be reduced by an additional externally wired dv/dt choke. For example, the RWK 305 three-phase dv/dt choke from Schaffner (www.schaffner.com) can be used. IMPORTANT: Even when using a dv/dt choke, it is necessary to ensure that an EMC-compatible, low inductance shield connection is used!
14) Only applies when using B&R motor cables and B&R motors.
15) The module's electrical output frequency (SCTRL_SPEED_ACT * MOTOR_POLEPAIRS) is monitored to protect against dual use in accordance with Regulation (EC) 428/2009 | 3A225. If the electrical output frequency of the module exceeds the limit value of 598 Hz uninterrupted for more than 0.5 s, then the current movement is aborted and error 6060 is output ("Power unit: Limit speed exceeded").
16) The connection is made with cable lugs for M8 (0.32") threaded bolts. The nominal cross section of the cable lug must match the cross section of the conductor to be connected in the particular application.
17) The maximum outer diameter that can be clamped depends on the shield component set used.
18) During configuration, it is necessary to check if the minimum voltage can be maintained on the holding brake with the intended wiring. For the operating voltage range of the holding brake, see the user documentation for the motor being used.
19) The specified value is only valid under the following conditions:
    - The 24 VDC power supply for the module is provided by an 8B0C auxiliary supply module located on the same mounting plate.
    - Connection of connectors S1 and S2 (activation of the external holding brake) by a jumper with a maximum length of 10 cm.
    If the 24 VDC power supply for the module is applied to the mounting plate using an 8BVE expansion module, then the output voltage is reduced because of voltage drops on the expansion cable. In this case, undervoltage monitoring must be disabled.
    If jumpers longer than 10 cm are used to connect connectors S1 and S2, then the output voltage is reduced due to voltage drops on the jumpers.
20) Only B&R 8BCF EnDat 2.2 cables are permitted to be used for wiring the encoder interfaces.
21) An EnDat 2.2 functional safety encoder is required when using ACOPOSmulti SafeMOTION inverter modules! With standard EnDat 2.2 encoders, only the STO, SBC and time-monitored SS1 safety functions are available!
22) Maximum encoder cable length l_{max} can be calculated as follows (the maximum permissible encoder cable length of 100 m is not permitted to be exceeded):

    $l_{max} = 7.9 / I_G * A * 1/(2*\rho)$

    I_G ... Max. current consumption of the encoder [A]
    A ... Cross section of the power supply wires [mm²]
    ρ ... Specific resistance [Ω mm²/m] (e.g. for copper: ρ = 0.0178)
23) $I_{Encoder}$ ... Max. current consumption of the connected encoder [A].

24) Continuous operation at an installation elevation of 500 m to 4,000 m above sea level is possible taking the specified reduction of continuous current into account.
25) This value only applies in its delivered state (SLOT2 of the module is sealed by a slot cover / shield plate). If SLOT2 on the module is not sealed, then the level of protection is reduced to IP10. It is important to note that a 8SCS005.0000-00 shield set (slot cover / shield plate) or plug-in module must always be inserted!
26) These dimensions refer to the actual device dimensions including the respective mounting plate. Additional spacing above and below the devices must be taken into account for mounting, connections and air circulation.

4 Overload characteristics

The continuous current for the module is permitted to be exceeded for a short time during operation (dynamic overload).

Overload response: WARNING

If the maximum overload time is exceeded, the module outputs a warning (WARNING).

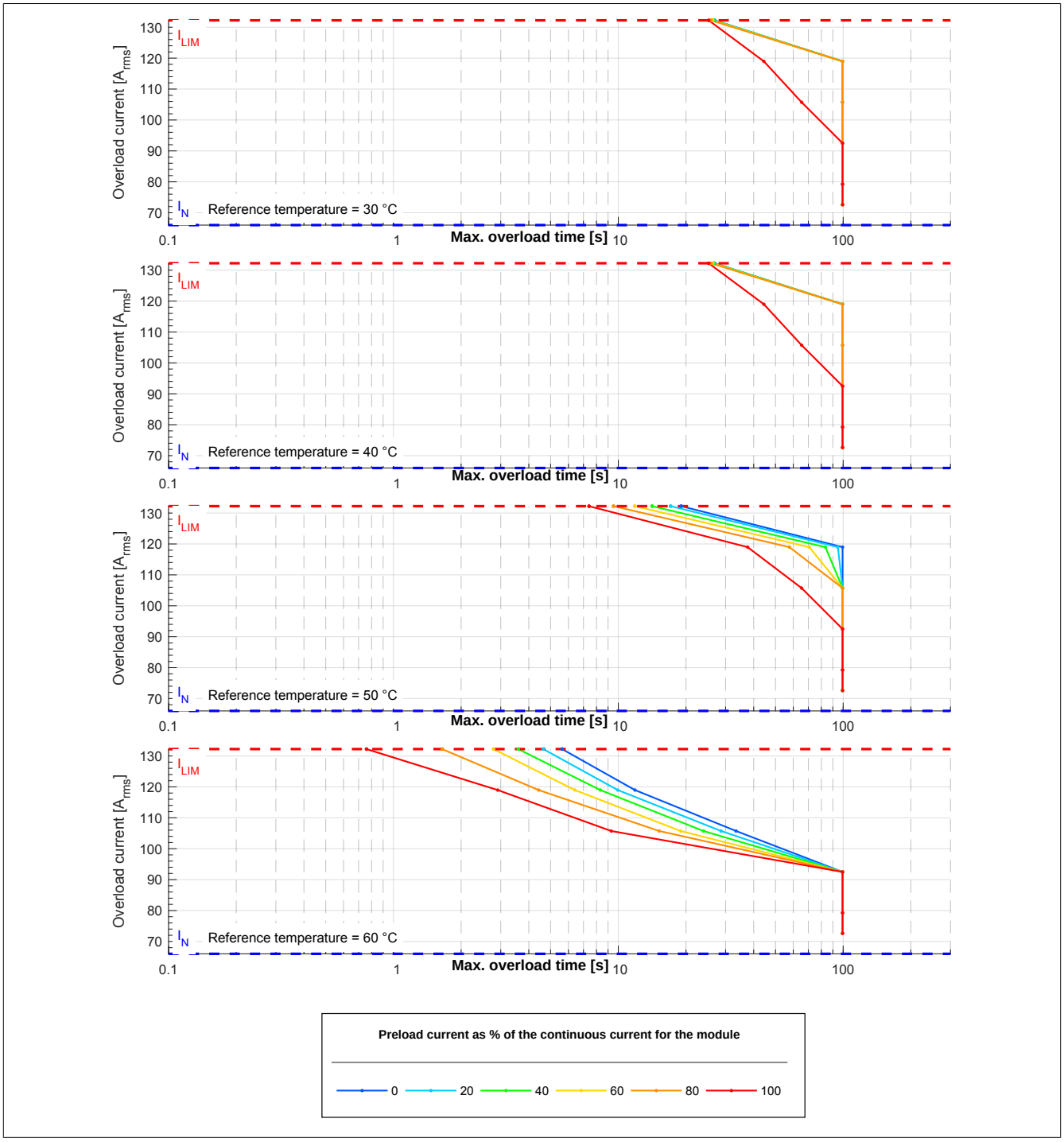

Figure 1: 8BVI0660HCSx.0x8-x - Overload characteristics, overload response - WARNING

I_N	Continuous current of the module [A_{rms}]
I_{LIM}	Peak current of the module [A_{rms}]
Mounting type:	Cold plate mounting
DC bus voltage:	750 V
Switching frequency:	5 kHz
Rotary frequency of current indicator:	20 Hz
Reference temperature:	Temperature of the coolant at the return of the cold plate mounting plate

Overload response ERROR + STOP

When the module exceeds the maximum overload duration, it outputs an error and executes a movement stop with current limiting (ERROR + STOP).

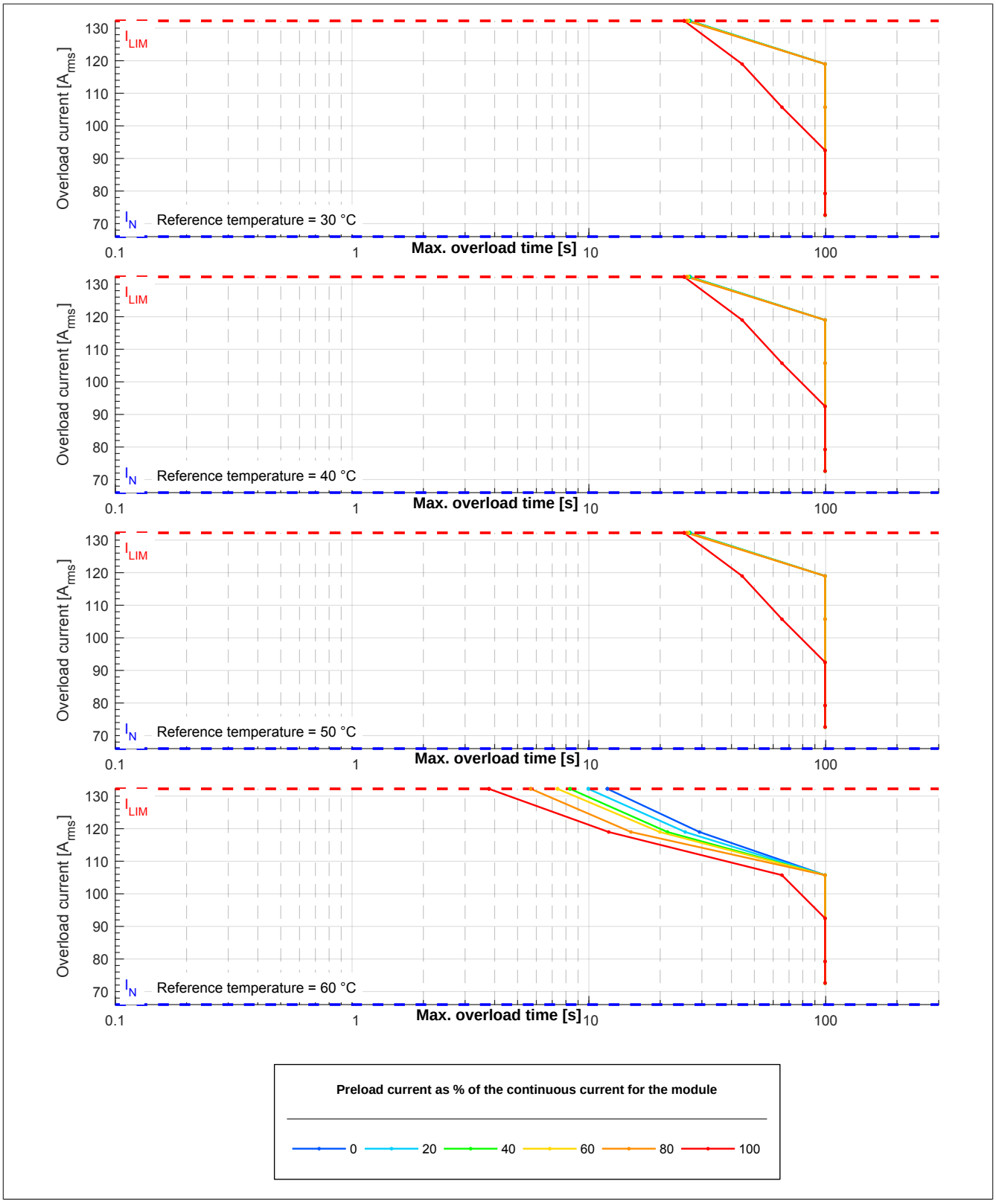

Figure 2: 8BVI0660HCSx.0x8-x - Overload characteristics, overload response - ERROR+STOP

I_N	Continuous current of the module [A_{rms}]
I_{LIM}	Peak current of the module [A_{rms}]
Mounting type:	Cold plate mounting
DC bus voltage:	750 V
Switching frequency:	5 kHz
Rotary frequency of current indicator:	20 Hz
Reference temperature:	Temperature of the coolant at the return of the cold plate mounting plate

5 Status indicators

Status indicators are located on the black cover of each module.

5.1 8BVI SafeMOTION inverter modules

5.1.1 1-axis modules

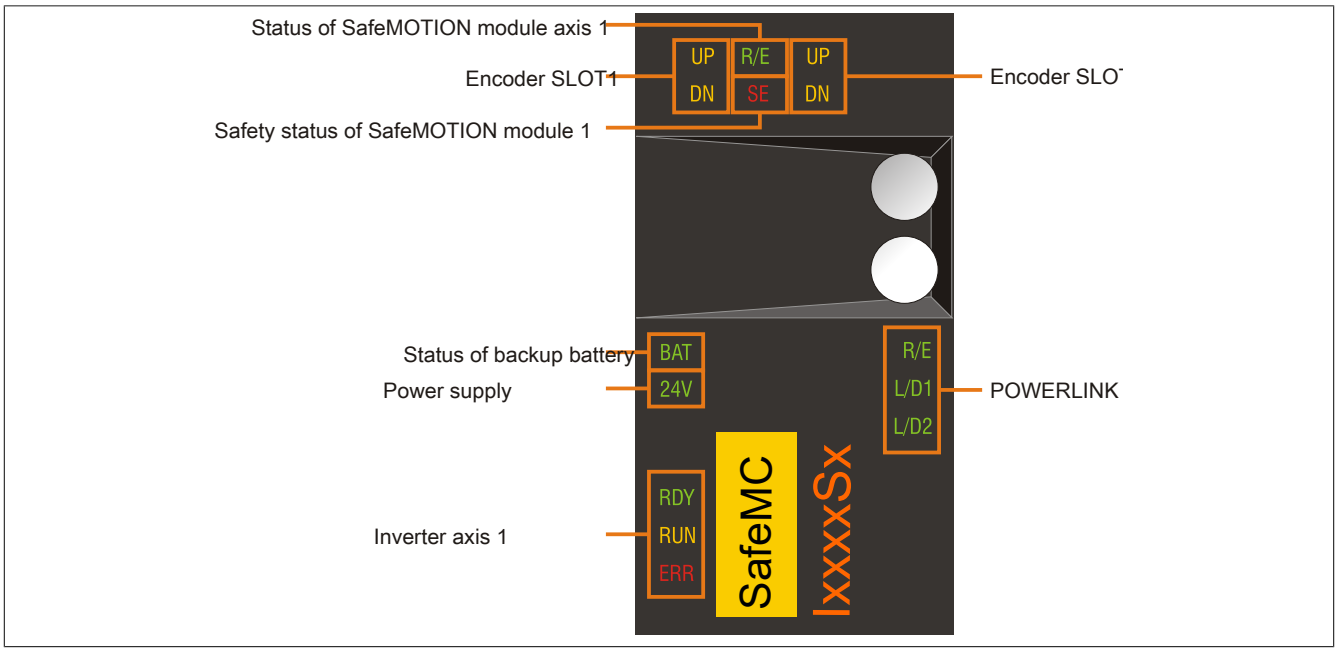

Figure 3: 8BVI SafeMOTION inverter modules (1-axis modules) - Status indicator groups[1)]

[1)] Status indicator group "Backup battery status" is only available for modules with an integrated battery holder. Starting with a certain revision, the integrated battery holder is not included and using accessory kit 8BXB000.0000-00 (battery for encoder buffering) is no longer possible. For details, see the revision information of the respective module (www.br-automation.com).

5.1.2 LED status indicators

Status indicator group	Label	Color	Function	Description
POWERLINK	R/E	Green/Red	Ready/Error	see "POWERLINK - LED status indicators" on page 10
	L/D1	Green	Link/Data activity on port 1	
	L/D2		Link/Data activity on port 2	
Inverter axis 1	RDY	Green	Ready	see "RDY, RUN, ERR (8BVI, 8BVP, 8B0P) - LED status indicators" on page 10
	RUN	Orange	Run	
	ERR	Red	Error	
Status of backup battery [1]	BAT	Green/Red	Ready/Error	see "Backup battery (ACOPOSmulti SafeMOTION EnDat 2.2) - LED status indicators" on page 11
Power supply	24 V	Green	24 V OK	The 24 V module power supply voltage is within the tolerance range.
Encoder SLOT1	UP	Orange	Encoder direction of rotation +	Indicates that the position of the connected encoder is changing in the positive direction. The faster the encoder position changes, the brighter the LED is lit.
	DN		Encoder direction of rotation -	Indicates that the position of the connected encoder is changing in the negative direction. The faster the encoder position changes, the brighter the LED is lit.
Encoder SLOT2	UP	Orange	Encoder direction of rotation +	see Encoder SLOT1
	DN		Encoder direction of rotation -	
Status of SafeMOTION module axis 1	R/E	Green/Red	Ready/Error	see "SafeMOTION module - LED status indicators" on page 12
Safety status of SafeMOTION module 1	SE	Red	Safe/Error	

Table 3: 8BVI SafeMOTION inverter modules (1-axis modules) - LED status indicators

1) Status indicator group "Backup battery status" is only available for modules with an integrated battery holder. Starting with a certain revision, the integrated battery holder is not included and using accessory kit 8BXB000.0000-00 (battery for encoder buffering) is no longer possible. For details, see the revision information of the respective module (www.br-automation.com).

5.1.3 RDY, RUN, ERR (8BVI, 8BVP, 8B0P) - LED status indicators

Label	Color	Function	Description	
RDY	Green	Ready	Solid green	The module is operational and the power stage can be enabled (operating system present and booted, no permanent or temporary errors).
			Blinking green [1]	The module is not ready for operation. **Examples:** • No signal on one or both enable inputs • DC bus voltage outside the tolerance range • Overtemperature on the motor (temperature sensor) • Motor feedback not connected or defective • Motor temperature sensor not connected or defective • Overtemperature on the module (IGBT junction, heat sink, etc.) • Disturbance on network
RUN	Orange	Run	Solid orange	The module's power stage is enabled.
ERR	Red	Error	Solid red [1]	There is a permanent error on the module. **Examples:** • Permanent overcurrent • Invalid data in EPROM

Table 4: RDY, RUN, ERR (8BVI, 8BVP, 8B0P) - LED status indicators

1) Firmware V2.130 and later.

5.1.4 POWERLINK - LED status indicators

Label	Color	Function	Description	
R/E	Green/Red	Ready/Error	LED off	The module is not supplied with power or network interface initialization has failed.
			Solid red	The POWERLINK node number of the module is 0.
			Blinking red/green	The client is in an error state (drops out of cyclic operation).
			Blinking green (1x)	The client detects a valid POWERLINK frame on the network.
			Blinking green (2x)	Cyclic operation on the network is taking place, but the client itself is not yet a participant.
			Blinking green (3x)	Cyclic operation of the client is in preparation.
			Solid green	The client is participating in cyclic operation.
			Flickering green	The client is not participating in cyclic operation and also does not detect any other stations on the network participating in cyclic operation.

Table 5: POWERLINK - LED status indicators

Label	Color	Function	Description	
L/D1	Green	Link/Data activity on port 1	Solid green	A physical connection has been established to another station on the network.
			Blinking green	Activity on port 1
L/D2	Green	Link/Data activity on port 2	Solid green	A physical connection has been established to another station on the network.
			Blinking green	Activity on port 2

Table 5: POWERLINK - LED status indicators

5.1.5 Backup battery (ACOPOSmulti SafeMOTION EnDat 2.2) - LED status indicators

Label	Color	Function	Description	
BAT [1]	Green/Red	Ready/Error	LED off	**Possible causes:** • The voltage of the installed backup battery is within the tolerance range, but an EnDat encoder with backup battery is not connected. • A battery-backed EnDat encoder is connected and registering "Battery OK", but the module's firmware version does not support EnDat encoders with battery backup.
			Solid green	A battery-backed EnDat encoder is connected and registering "Battery OK" (voltage of the installed backup battery is within the tolerance range).
			Solid red	A battery-backed EnDat encoder is connected and registering "Battery not OK". **Possible causes:** • Voltage of the installed backup battery outside of tolerance range • No backup battery installed in module

Table 6: Backup battery - LED status indicators

1) Status indicator group "Backup battery status" is only available for modules with an integrated battery holder. Starting with a certain revision, the integrated battery holder is not included and using accessory kit 8BXB000.0000-00 (battery for encoder buffering) is no longer possible. For details, see the revision information of the respective module (www.br-automation.com).

5.1.6 SafeMOTION module - LED status indicators

There are 3 additional LEDs for each safe axis behind the front cover of an ACOPOSmulti SafeMOTION inverter module:

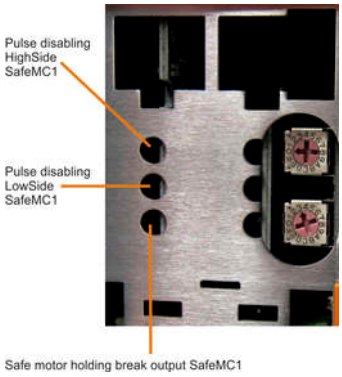

Figure 4: 1-axis modules

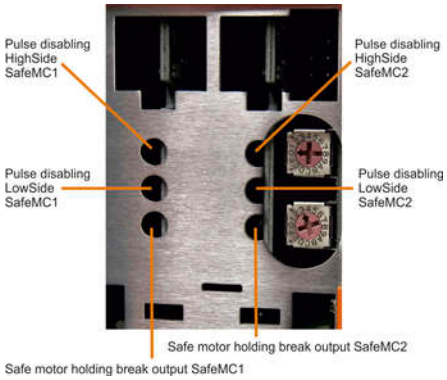

Figure 5: 2-axis modules

LED	Color		Description
R/E	Green	Red	
	Off	Off	Module not supplied with power, no communication
	Single flash		Mode "Unlink"
	Double flash		Updating the firmware
	Blinking		Mode PREOPERATIONAL
	On		Mode RUN
	On	Single flash, inverse	Safety-related firmware invalid
		Triple flash, inverse	Updating safety-related firmware
		On	Communication error
	Off	On	Error
LED status indicator Pulse disabling output, high-side	Red		Warning/Error on the channel During the startup phase, the channel LEDs are always lit constantly red.
	Orange		24 V on the output
	Off		0 V on the output
LED status indicator Pulse disabling output, low-side	Red		Warning/Error on the channel During the startup phase, the channel LEDs are always lit constantly red.
	Orange		24 V on the output
	Off		0 V on the output
LED status indicator Motor holding brake output	Red		Warning/Error on the channel During the startup phase, the channel LEDs are always lit constantly red.
	Orange		24 V on the output
	Off		0 V on the output
SE	Red	Off	Mode RUN
		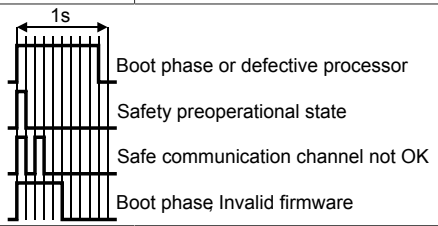	
		On	Non-acknowledgeable error state, FAIL SAFE state
	The two "SE" indicators are two separate LEDs that show the states of safety processor 1 and safety processor 2. This is only distinguishable when the front cover is open, however.		

Table 7: SafeMOTION module - LED status indicators

Danger!

Constantly lit "SE" LEDs indicate a non-acknowledgeable FAIL SAFE state. The cause of this could be a defective module or faulty configuration.
Check the entries in the logbook! If you are able to rule out a faulty configuration, then the module is defective and must be replaced immediately.

It is your responsibility to ensure that all necessary repair measures or corrections to the configuration are initiated after an error occurs since subsequent errors can result in dangerous situations!

5.1.7 Status changes when starting up the operating system loader

The following intervals are used for the LED status indicators:

Width of box: 50 ms
Repeats after: 3,000 ms

Status	LED	Display
1. Boot procedure for base hardware active	RDY	
	RUN	
	ERR	
2. Network configuration active	RDY	
	RUN	
	ERR	
3. Waiting for network telegram	RDY	
	RUN	
	ERR	
4. Network communication active	RDY	
	RUN	
	ERR	
5. ACOPOS operating system being transferred/burned [1]	RDY	
	RUN	
	ERR	

Table 8: Status changes when starting up the operating system loader

1) Firmware V2.140 and later.

5.1.8 Setting the POWERLINK node number

The POWERLINK node number can be set using the two coded hexadecimal rotary switches located behind the black cover.

Figure		Coded rotary switches	POWERLINK node number
Cover closed	Cover open		
		1	Position 16
		2	Position 1
The POWERLINK node number change takes effect the next time the ACOPOS-multi drive system is switched on.			

Information:

Node numbers in the range from 0x01 to 0xFD are allowed.

***Recommendation*: For compatibility reasons, avoid node numbers between 0xF0 and 0xFD since these are intended for future system expansions.**

Node numbers 0x00, 0xFE and 0xFF are reserved and therefore not permitted to be set.

Table 9: Setting the POWERLINK node number

6 Dimension diagram and installation dimensions

6.1 Cold plate

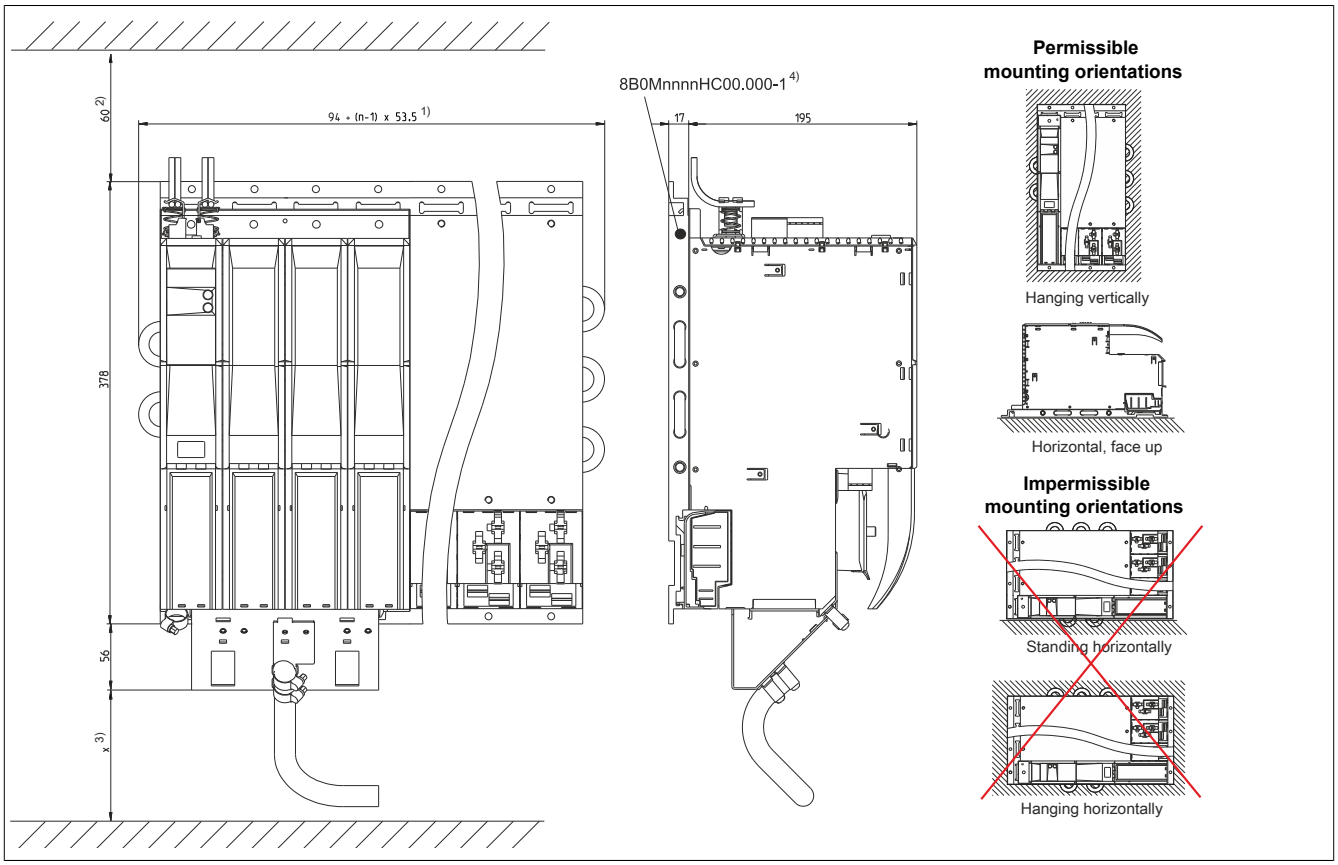

Figure 6: Cold plate - Dimension diagram and installation dimensions

1) n... Number of width units on the mounting plate
2) For sufficient air circulation, a clearance of at least 60 mm must be provided above the mounting plate and below the module.
3) The required spacing x to the wiring on the bottom of the module depends on the motor cable being used.
4) nnnn indicates the number of slots (e.g. 0160 refers to 16 slots).

Information:

When installing ACOPOSmulti modules with cold plate or pass-through mounting, it is important to ensure that the rear panel of the control cabinet is not scratched. This results in deterioration of the heat dissipation to the mounting plate.

Do not place ACOPOSmulti modules on their bottom side for cold plate or pass-through mounting. Doing so could break the clips that hold the unit is fan. Broken clips make it more difficult to replace the fans later on.

6.2 Feed-through mounting

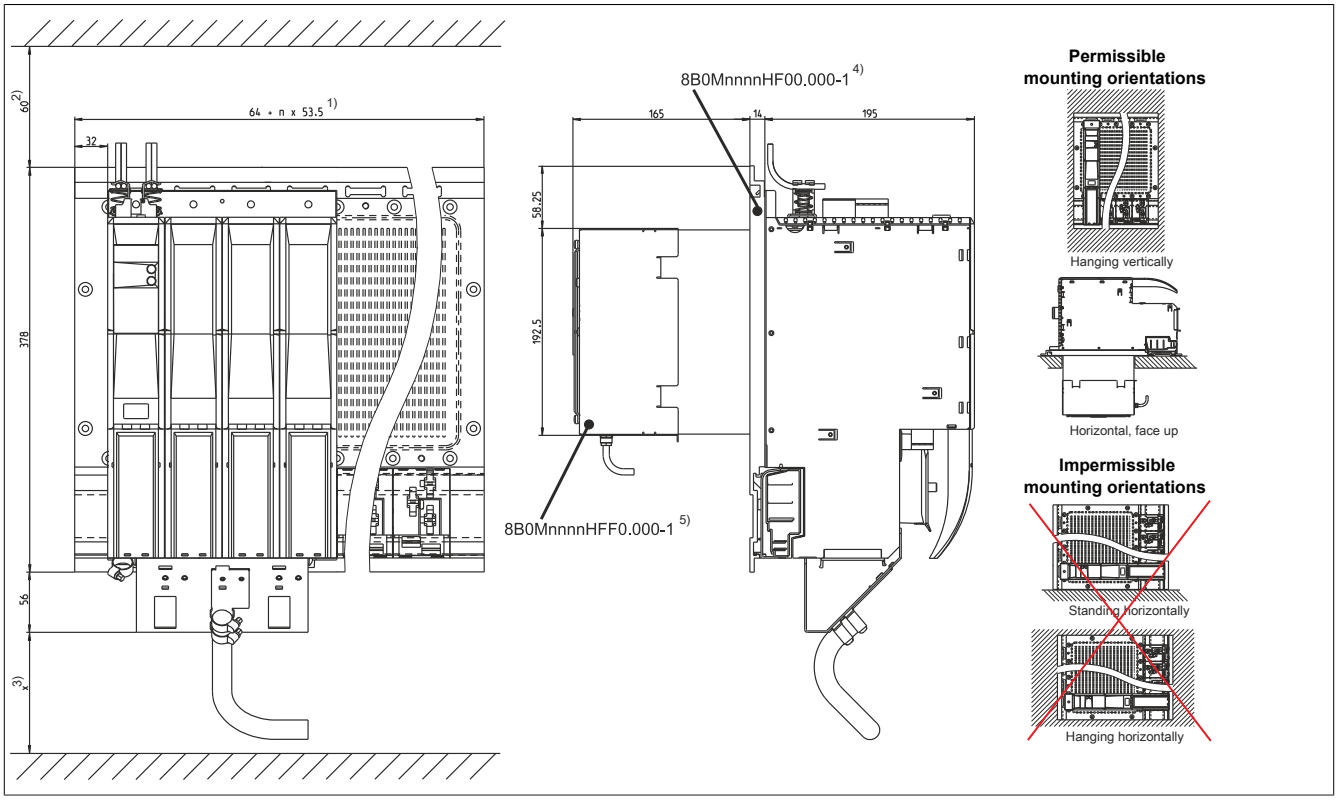

Figure 7: Pass-through mounting - Dimension diagram and installation dimensions

1) n... Number of width units on the mounting plate
2) For sufficient air circulation, a clearance of at least 60 mm must be provided above the mounting plate and below the module.
3) The required spacing x to the wiring on the bottom of the module depends on the motor cable being used.
4) nnnn indicates the number of slots (e.g. 0160 refers to 16 slots).
5) For sufficient air circulation, a clearance of at least 100 mm must be provided around the fan module.

Information:

When installing ACOPOSmulti modules with cold plate or pass-through mounting, it is important to ensure that the rear panel of the control cabinet is not scratched. This results in deterioration of the heat dissipation to the mounting plate.

Do not place ACOPOSmulti modules on their bottom side for cold plate or pass-through mounting. Doing so could break the clips that hold the unit is fan. Broken clips make it more difficult to replace the fans later on.

7 Wiring: Safe 4x width inverter modules (1-axis modules)

7.1 ACOPOSmulti SafeMOTION EnDat 2.2 - Pinout overview

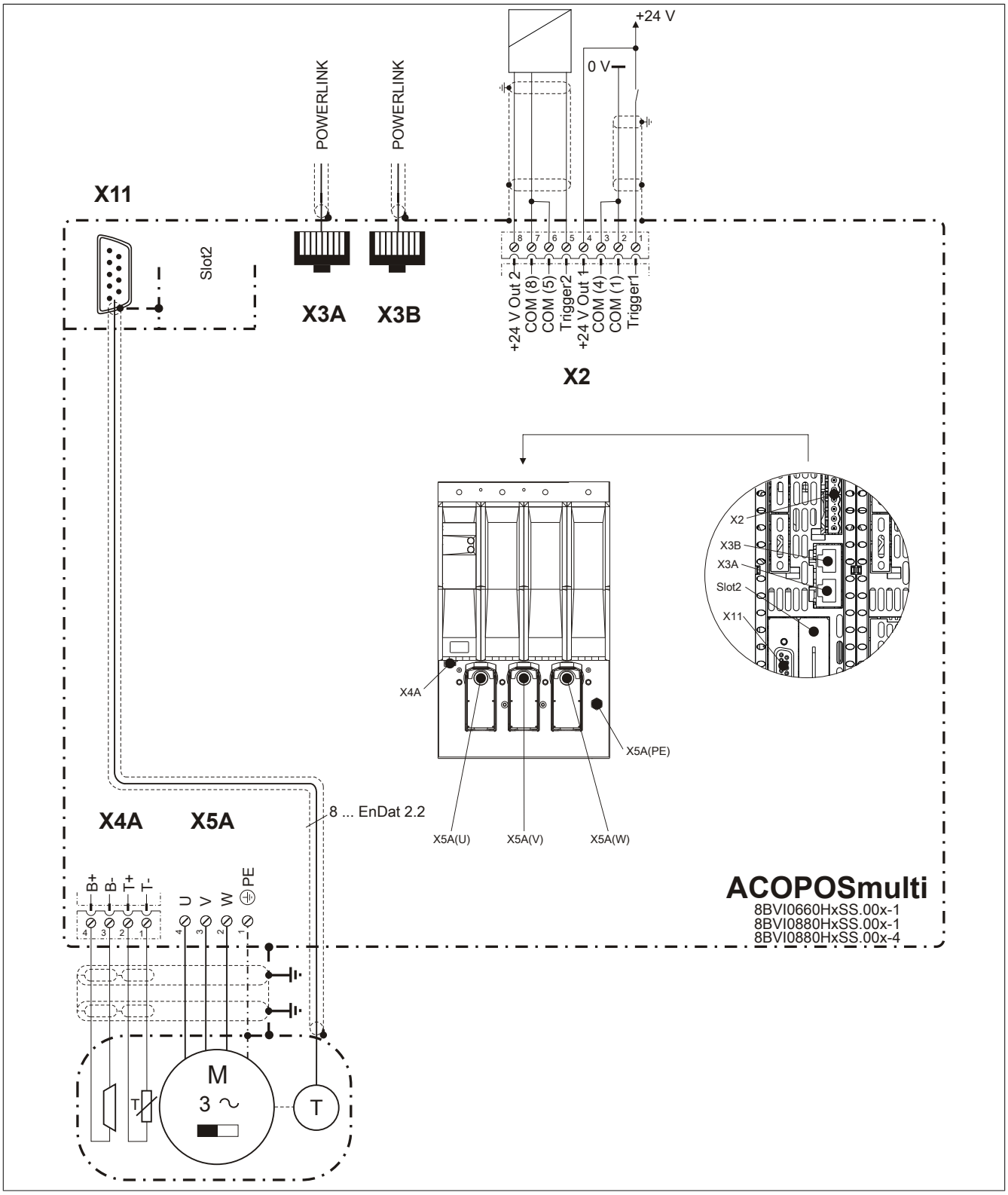

Figure 8: Pinout overview

7.2 Connector X2 - Pinout

X2	Pin	Name	Function
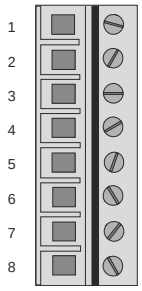 8TB2108.2010-00	1	Trigger 1	Trigger 1
	2	COM (1)	Trigger 1 0 V
	3	COM (2)	+24 V output 1 0 V
	4	+24 V Out 1	+24 V output 1
	5	Trigger 2	Trigger 2
	6	COM (5)	Trigger 2 0 V
	7	COM (8)	+24 V output 2 0 V
	8	+24 V Out 2	+24 V output 2

Table 10: Connector X2 - Pinout

7.3 Connectors X3A, X3B - Pinout

X3A, X3B	Pin	Name	Function
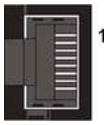	1	RXD	Receive signal
	2	RXD\	Receive signal inverted
	3	TXD	Transmit signal
	4	Shield	Shield
	5	Shield	Shield
	6	TXD\	Transmit signal inverted
	7	Shield	Shield
	8	Shield	Shield

Table 11: X3A, X3B connectors - Pinout

7.4 Connector X4A - Pinout

X4A	Name	Function
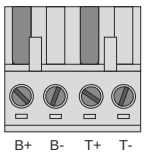 8TB2104.203L-00	T-	Axis 1: Temperature sensor -
	T+	Axis 1: Temperature sensor +
	B-	Axis 1: Brake -
	B+	Axis 1: Brake +

Table 12: Connector X4A - Pinout

Danger!

A short circuit of SBC output B+ against 24 V results in state FUNCTIONAL FAIL SAFE being enabled. This means that safe pulse disabling is enabled. The brake always remains switched on / released, however, due to the short circuit to 24 V!
This can result in dangerous situations since the motor holding brake cannot brake, prevent the spin-out movement or prevent the unbraked lowering movement when loads are suspended!
A short circuit of SBC output B+ against 24 V must be prevented by suitable wiring measures!

Danger!

The following applies to the SBC output:

- **The SBC output is not permitted to be wired across modules!**
- **The SBC output is not permitted to be wired as an open emitter!**
- **The SBC output is not permitted to be wired as an open collector!**

Danger!

Only an output voltage of ≤ 5 V can be ensured for the safe motor holding brake output in the switched-off state. When selecting the motor holding brake, the user must ensure that the required braking torque is achieved with a voltage of 5 V applied.

Information:

The transistors of the SBC output stage are tested cyclically. When the output channels are active, this test emits low pulses on the output with a maximum length of 600 µs.

This must be taken into account when choosing the motor holding brake!

Danger!

The connections for the motor temperature sensors and the motor holding brake are safely isolated circuits. As a result, only devices or components that have at least safe isolation per IEC 60364-4-41 or EN 61800-5-1 are permitted to be connected to these connections.

Caution!

If B+ and B- are swapped when connecting the permanent magnet holding brakes, then the brakes cannot be opened! ACOPOSmulti inverter modules cannot determine if a holding brake is connected with reverse polarity!

Warning!

Temperature sensors are only permitted to be connected to the X4A/T+ and X4A/T- connectors on an ACOPOSmulti module under the following conditions:

- **SLOT1 of the ACOPOSmulti module does not contain an ACOPOSmulti plug-in module to which a temperature sensor is connected on the T+ and T- connections.**

Otherwise, the temperature monitoring functions on the ACOPOSmulti module may become ineffective, which in extreme cases can cause the hardware (e.g. motors) connected to the ACOPOSmulti module to be destroyed!

Connections T+ and T- are not required when using 8BCHxxxx hybrid motor cables.

7.5 X5A - Pinout

X5A	Name	Function
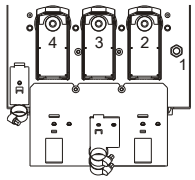	1	Axis 1: Protective ground conductor
	2	Axis 1: Motor connection W
	3	Axis 1: Motor connection V
	4	Axis 1: Motor connection U

Table 13: X5A - Pinout

Information:

Only B&R 8BCM motor cables or B&R 8BCH hybrid motor cables are permitted to be used for wiring the motor connections!

Motor connections U, V, W - Cable installation

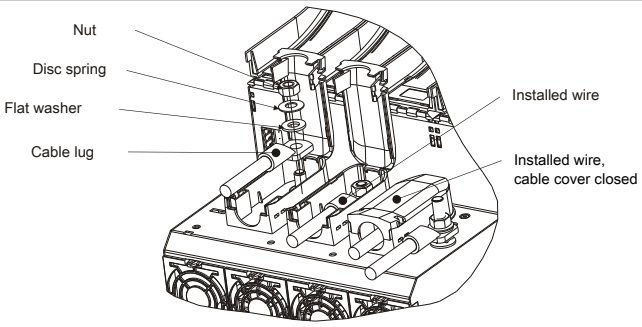

Figure 9: X5A - Cable installation

PE connection (1-wire) - Cable installation

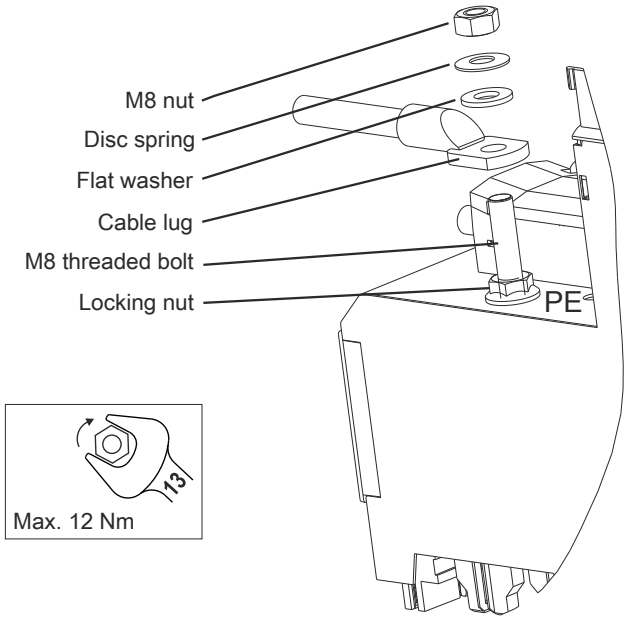

PE connection (1-wire) - Overview of installation material

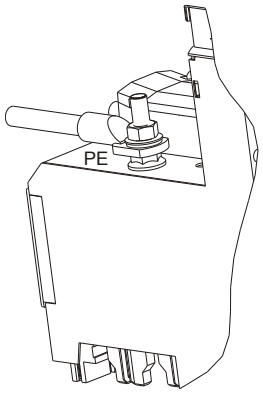

Installed wire

Table 14: PE connection (1-wire) - Cable installation

PE connection (3-wire) - Cable installation

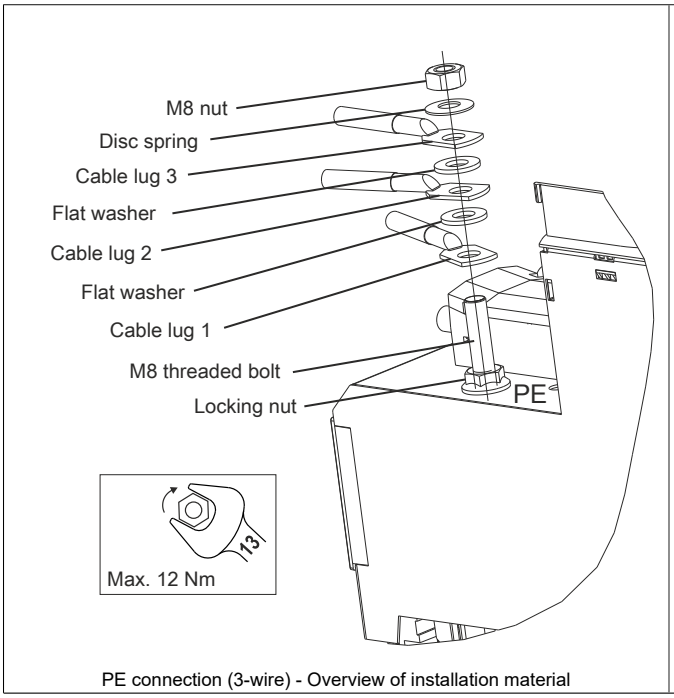

PE connection (3-wire) - Overview of installation material

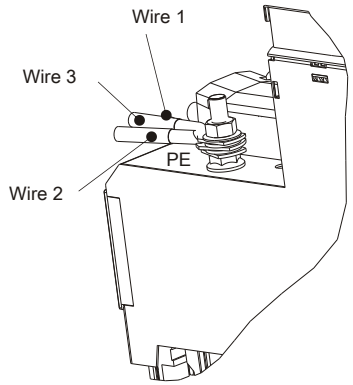

Installed wire

Table 15: PE connection (3-wire) - Cable installation

7.6 SafeMOTION EnDat 2.2 module - Pinout

Figure	X11 (X12)	Pin	Description	Function
	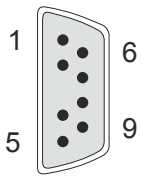	1	U+	Encoder power supply +12.5 V
		2	---	---
		3	---	---
		4	D	Data input
		5	T	Clock output
		6	COM (1)	Encoder power supply 0 V
		7	---	---
		8	D\	Data input inverted
		9	T\	Clock output inverted

Information:

Only B&R 8BCF EnDat 2.2 cables or B&R 8BCH hybrid motor cables are permitted to be used for wiring the encoder interfaces!

Information:

The SafeMOTION module cannot be replaced! The SafeMOTION module and the ACOPOSmulti SafeMOTION inverter module together form a single unit. In the event of an error, the entire module must be replaced.