DATASHEET - DILEM-10(230V50HZ,240V60HZ)



Contactor, 230 V 50 Hz, 240 V 60 Hz, 3 pole, 380 V 400 V, 4 kW, Contacts N/O = Normally open= 1 N/O, Screw terminals, AC operation

Powering Business Worldwide

Part no.	**DILEM-10(230V50HZ,240V60HZ)**
Catalog No.	**051786**
Alternate Catalog No.	**XTMC9A10F**
EL-Nummer (Norway)	**4130378**

Delivery program

Product range			Contactors
Application			Mini Contactors for Motors and Resistive Loads
Subrange			DILEM contactors
Utilization category			AC-1: Non-inductive or slightly inductive loads, resistance furnaces NAC-3: Normal AC induction motors: starting, switch off during running AC-4: Normal AC induction motors: starting, plugging, reversing, inching
			IE3
Notes			Also suitable for motors with efficiency class IE3. IE3-ready devices are identified by the logo on their packaging.
Connection technique			Screw terminals
Description			With auxiliary contact
Number of poles			3 pole
Rated operational current			
AC-3			
380 V 400 V	I_e	A	9
AC-1			
Conventional free air thermal current, 3 pole, 50 - 60 Hz			
Open			
at 40 °C	$I_{th} = I_e$	A	22
Max. rating for three-phase motors, 50 - 60 Hz			
AC-3			
220 V 230 V	P	kW	2.2
380 V 400 V	P	kW	4
660 V 690 V	P	kW	4
AC-4			
220 V 230 V	P	kW	1.5
380 V 400 V	P	kW	3
660 V 690 V	P	kW	3
Contacts			
N/O = Normally open			1 N/O
Contact sequence			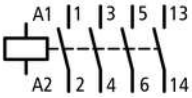
For use with			…DILEM …DILE
Actuating voltage			230 V 50 Hz, 240 V 60 Hz
Voltage AC/DC			AC operation

Technical data

General

Standards			IEC/EN 60947, VDE 0660, CSA, UL
Lifespan, mechanical; Coil 50/60 Hz	Operations	x 10^6	7
Lifespan, mechanical	Operations	x 10^6	10

Maximum operating frequency			
Mechanical		Ops./h	9000
electrical (Contactors without overload relay)	Operations/h		Page 05/070
Climatic proofing			Damp heat, constant, to IEC 60068-2-78 Damp heat, cyclic, to IEC 60068-2-30
Ambient temperature			
Open		°C	-25 - +50
Enclosed		°C	- 25 - 40
Storage		°C	
Min. ambient temperature, storage		°C	- 40
Ambient temperature, storage max.		°C	+ 80
Mounting position			As required, except vertical with terminals A1/A2 at the bottom
Mounting position			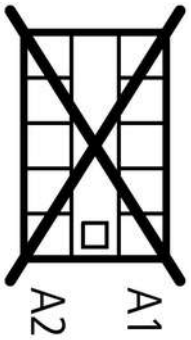
Mechanical shock resistance (IEC/EN 60068-2-27)			
Half-sinusoidal shock, 10 ms			
Basic unit without auxiliary contact module			
Main contacts, make contacts		g	10
Main contacts Make/break contacts		g	
Make		g	8
Basic unit with auxiliary contact module			
Main contacts make contact		g	
Make		g	10
Auxiliary contacts Make/break contacts		g	20 / 20
Degree of Protection			IP20
Protection against direct contact when actuated from front (EN 50274)			Finger and back-of-hand proof
Weight		kg	0.17
Terminal capacity of auxiliary and main contacts			
Screw terminals			
Solid		mm^2	1 x (0.75 - 2.5) 2 x (0.75 - 2.5)
Flexible with ferrule		mm^2	1 x (0.75 - 1.5) 2 x (0.75 - 1.5)
Solid or stranded		AWG	18 - 14
Stripping length		mm	8
Terminal screw			M3.5
Pozidriv screwdriver		Size	2
Standard screwdriver		mm	0.8 x 5.5 1 x 6
Max. tightening torque		Nm	1.2

Main conducting paths

Rated impulse withstand voltage	U_{imp}	V AC	6000
Overvoltage category/pollution degree			III/3
Rated insulation voltage	U_i	V AC	690
Rated operational voltage	U_e	V AC	690
Safe isolation to EN 61140			
between coil and contacts		V AC	300
between the contacts		V AC	300
Making capacity (cos φ to IEC/EN 60947)		A	110

Breaking capacity			
220 V 230 V		A	90
380 V 400 V		A	90
500 V		A	64
660 V 690 V		A	42
Short-circuit protection maximum fuse			
Type "2", 500 V	gL/gG	A	10
Type "1", 500 V	gL/gG	A	20

AC

AC-1			
Rated operational current			
Conventional free air thermal current, 3 pole, 50 - 60 Hz			
Open			
at 40 °C	$I_{th} = I_e$	A	22
at 50 °C	$I_{th} = I_e$	A	20
at 55 °C	$I_{th} = I_e$	A	19
enclosed	I_{th}	A	16
Notes			At maximum permissible ambient air temperature.
Conventional free air thermal current, 1 pole			
Notes			At maximum permissible ambient air temperature.
open	I_{th}	A	50
enclosed	I_{th}	A	40
AC-3			
Rated operational current			
Open, 3-pole: 50 – 60 Hz			
Notes			At maximum permissible ambient air temperature.
220 V 230 V	I_e	A	9
240 V	I_e	A	9
380 V 400 V	I_e	A	9
415 V	I_e	A	9
440V	I_e	A	9
500 V	I_e	A	6.4
660 V 690 V	I_e	A	4.8
Motor rating	P	kWh	
220 V 230 V	P	kW	2.2
240V	P	kW	2.5
380 V 400 V	P	kW	4
415 V	P	kW	4.3
440 V	P	kW	4.6
500 V	P	kW	4
660 V 690 V	P	kW	4
AC-4			
Rated operational current			
Open, 3-pole: 50 – 60 Hz			
Notes			At maximum permissible ambient air temperature.
220 V 230 V	I_e	A	6.6
240 V	I_e	A	6.6
380 V 400 V	I_e	A	6.6
415 V	I_e	A	6.6
440 V	I_e	A	6.6
500 V	I_e	A	5
660 V 690 V	I_e	A	3.4
Motor rating	P	kWh	
220 V 230 V	P	kW	1.5

240 V	P	kW	1.8
380 V 400 V	P	kW	3
415 V	P	kW	3.1
440 V	P	kW	3.3
500 V	P	kW	3
660 V 690 V	P	kW	3

DC

Rated operational current open			
DC-1			
12 V	I_e	A	20
24 V	I_e	A	20
60 V	I_e	A	20
110 V	I_e	A	20
220 V	I_e	A	20
Current heat losses (3- or 4-pole)			
at I_{th}, 50 °C		W	5.9
at I_e to AC-3/400 V		W	1.2

Magnet systems

Voltage tolerance			
AC operated			
Single-voltage coil 50 Hz and dual-voltage coil 50 Hz, 60 Hz	Pick-up	x U_c	0.8 - 1.1
Dual-frequency coil 50/60 Hz	Pick-up	x U_c	
Voltage tolerance Dual-frequency coil 50/60 Hz, max. pick-up voltage		x U_c	1.1
Power consumption			
AC operation			
Single-voltage coil 50 Hz and dual-voltage coil 50 Hz, 60 Hz	Pick-up	VA	25
Single-voltage coil 50 Hz and dual-voltage coil 50 Hz, 60 Hz	Pick-up	W	22
Single-voltage coil 50 Hz and dual-voltage coil 50 Hz, 60 Hz	Sealing	VA	4.6
Single-voltage coil 50 Hz and dual-voltage coil 50 Hz, 60 Hz	Sealing	W	1.8
Duty factor		% DF	100
Switching times at 100 % U_c			
Make contact		ms	
Closing delay		ms	
Closing delay min.		ms	14
Closing delay max.		ms	21
Opening delay		ms	
Opening delay min.		ms	8
Opening delay max.		ms	18
Closing delay with top mounting auxiliary contact		ms	45
Reversing contactors			
Changeover time at 110 % U_c			
Changeover time min.		ms	16
Changeover time max.		ms	21
Arcing time at 690 V AC		ms	12

Auxiliary contacts

Positive operating contacts to EN 60947-5-1 appendix L, including auxiliary contact module			Yes
Rated impulse withstand voltage	U_{imp}	V AC	6000
Overvoltage category/pollution degree			III/3
Rated insulation voltage	U_i	V AC	690
Rated operational voltage	U_e	V AC	600
Safe isolation to EN 61140			
between coil and auxiliary contacts		V AC	300
between the auxiliary contacts		V AC	300
Rated operational current			

AC-15			
220 V 240 V	I_e	A	6
380 V 415 V	I_e	A	3
500 V	I_e	A	1.5
DC L/R ≦ 15 ms			
Contacts in series:		A	
1	24 V	A	2.5
2	60 V	A	2.5
3	100 V	A	1.5
3	220 V	A	0.5
Conv. thermal current	I_{th}	A	10
Control circuit reliability	Failure rate	λ	$<10^{-8}$, < one failure at 100 million operations (at U_e = 24 V DC, U_{min} = 17 V, I_{min} = 5.4 mA)
Component lifespan at U_e = 240 V			
AC-15	Operations	x 10^6	0.2
DC current			
L/R = 50 ms: 2 contacts in series at I_e = 0.5 A	Operations	x 10^6	0.15
Notes			Switch-on and switch-off conditions based on DC-13, time constant as specified
Short-circuit rating without welding			
Maximum overcurrent protective device			
Short-circuit protection only			PKZM0-4
Short-circuit protection maximum fuse			
500 V		A gG/gL	6
500 V		A fast	10
Current heat loss at a load of I_{th} per contact		W	1.1

Rating data for approved types

Switching capacity			
Maximum motor rating			
Three-phase			
200 V 208 V		HP	2
230 V 240 V		HP	3
460 V 480 V		HP	5
575 V 600 V		HP	5
Single-phase			
115 V 120 V		HP	0.5
230 V 240 V		HP	1.5
General use		A	15
Auxiliary contacts			
Pilot Duty			
AC operated			A600
DC operated			P300
General Use			
AC		V	600
AC		A	10
DC		V	250
DC		A	0.5
Short Circuit Current Rating		SCCR	
Basic Rating			
SCCR		kA	5
max. Fuse		A	45

Design verification as per IEC/EN 61439

Technical data for design verification			
Rated operational current for specified heat dissipation	I_n	A	9
Heat dissipation per pole, current-dependent	P_{vid}	W	0.4
Equipment heat dissipation, current-dependent	P_{vid}	W	1.2
Static heat dissipation, non-current-dependent	P_{vs}	W	1.8
Heat dissipation capacity	P_{diss}	W	0
Operating ambient temperature min.		°C	-25
Operating ambient temperature max.		°C	50
IEC/EN 61439 design verification			
10.2 Strength of materials and parts			
10.2.2 Corrosion resistance			Meets the product standard's requirements.
10.2.3.1 Verification of thermal stability of enclosures			Meets the product standard's requirements.
10.2.3.2 Verification of resistance of insulating materials to normal heat			Meets the product standard's requirements.
10.2.3.3 Verification of resistance of insulating materials to abnormal heat and fire due to internal electric effects			Meets the product standard's requirements.
10.2.4 Resistance to ultra-violet (UV) radiation			Meets the product standard's requirements.
10.2.5 Lifting			Does not apply, since the entire switchgear needs to be evaluated.
10.2.6 Mechanical impact			Does not apply, since the entire switchgear needs to be evaluated.
10.2.7 Inscriptions			Meets the product standard's requirements.
10.3 Degree of protection of ASSEMBLIES			Does not apply, since the entire switchgear needs to be evaluated.
10.4 Clearances and creepage distances			Meets the product standard's requirements.
10.5 Protection against electric shock			Does not apply, since the entire switchgear needs to be evaluated.
10.6 Incorporation of switching devices and components			Does not apply, since the entire switchgear needs to be evaluated.
10.7 Internal electrical circuits and connections			Is the panel builder's responsibility.
10.8 Connections for external conductors			Is the panel builder's responsibility.
10.9 Insulation properties			
10.9.2 Power-frequency electric strength			Is the panel builder's responsibility.
10.9.3 Impulse withstand voltage			Is the panel builder's responsibility.
10.9.4 Testing of enclosures made of insulating material			Is the panel builder's responsibility.
10.10 Temperature rise			The panel builder is responsible for the temperature rise calculation. Eaton will provide heat dissipation data for the devices.
10.11 Short-circuit rating			Is the panel builder's responsibility. The specifications for the switchgear must be observed.
10.12 Electromagnetic compatibility			Is the panel builder's responsibility. The specifications for the switchgear must be observed.
10.13 Mechanical function			The device meets the requirements, provided the information in the instruction leaflet (IL) is observed.

Technical data ETIM 7.0

Low-voltage industrial components (EG000017) / Power contactor, AC switching (EC000066)			
Electric engineering, automation, process control engineering / Low-voltage switch technology / Contactor (LV) / Power contactor, AC switching (ecl@ss10.0.1-27-37-10-03 [AAB718015])			
Rated control supply voltage Us at AC 50HZ		V	230 - 230
Rated control supply voltage Us at AC 60HZ		V	240 - 240
Rated control supply voltage Us at DC		V	0 - 0
Voltage type for actuating			AC
Rated operation current Ie at AC-1, 400 V		A	22
Rated operation current Ie at AC-3, 400 V		A	9
Rated operation power at AC-3, 400 V		kW	4
Rated operation current Ie at AC-4, 400 V		A	6.6
Rated operation power at AC-4, 400 V		kW	3
Rated operation power NEMA		kW	3.7
Modular version			No
Number of auxiliary contacts as normally open contact			1
Number of auxiliary contacts as normally closed contact			0
Type of electrical connection of main circuit			Screw connection
Number of normally closed contacts as main contact			0

Number of main contacts as normally open contact	3

Approvals

Product Standards	IEC/EN 60947-4-1; UL 508; CSA-C22.2 No. 14-05; CE marking
UL File No.	E29096
UL Category Control No.	NLDX
CSA File No.	012528
CSA Class No.	3211-04
North America Certification	UL listed, CSA certified
Specially designed for North America	No

Characteristics

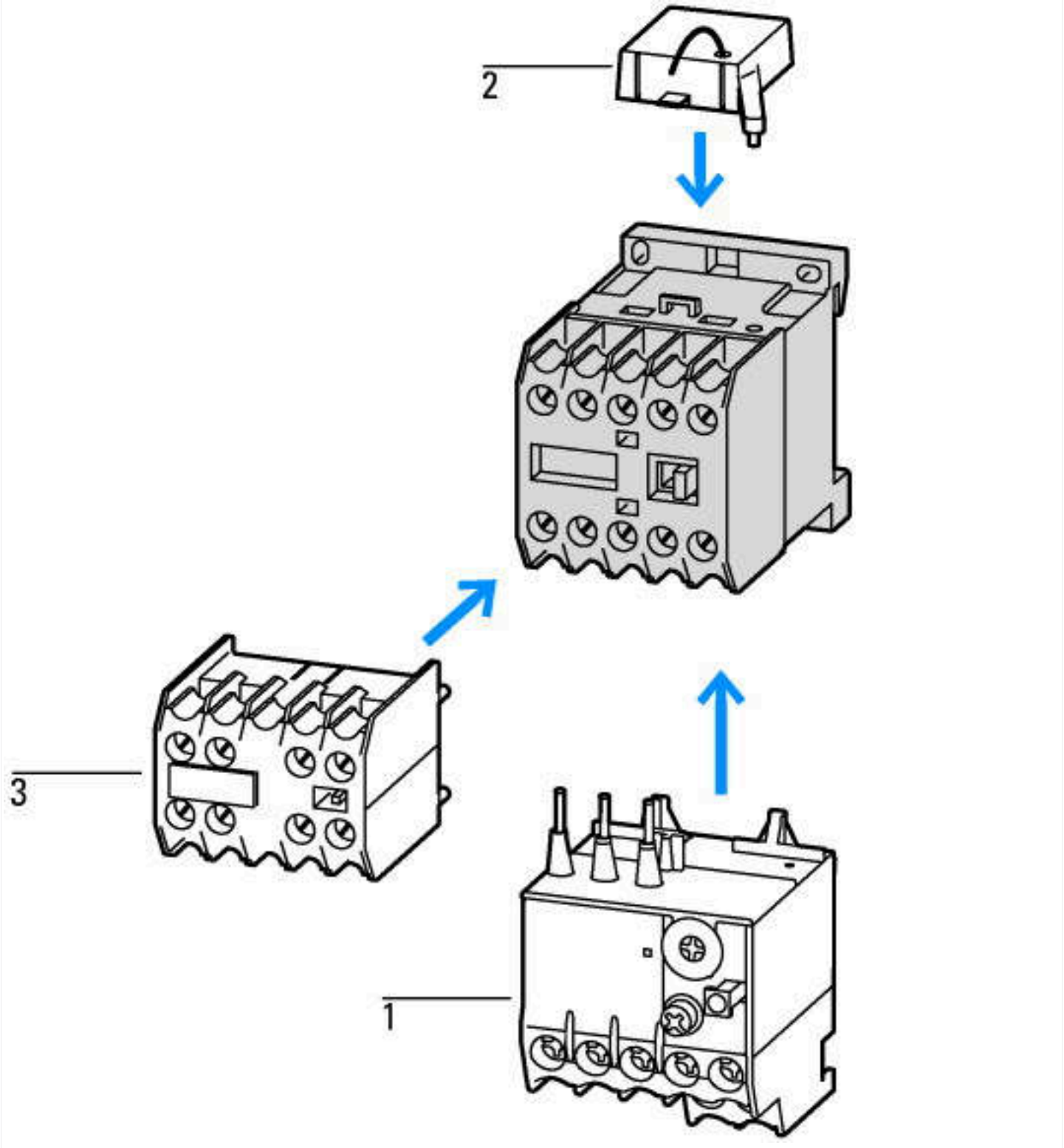

1: Overload relay
2: Suppressor
3: Auxiliary contact modules

Enclosure totally insulated

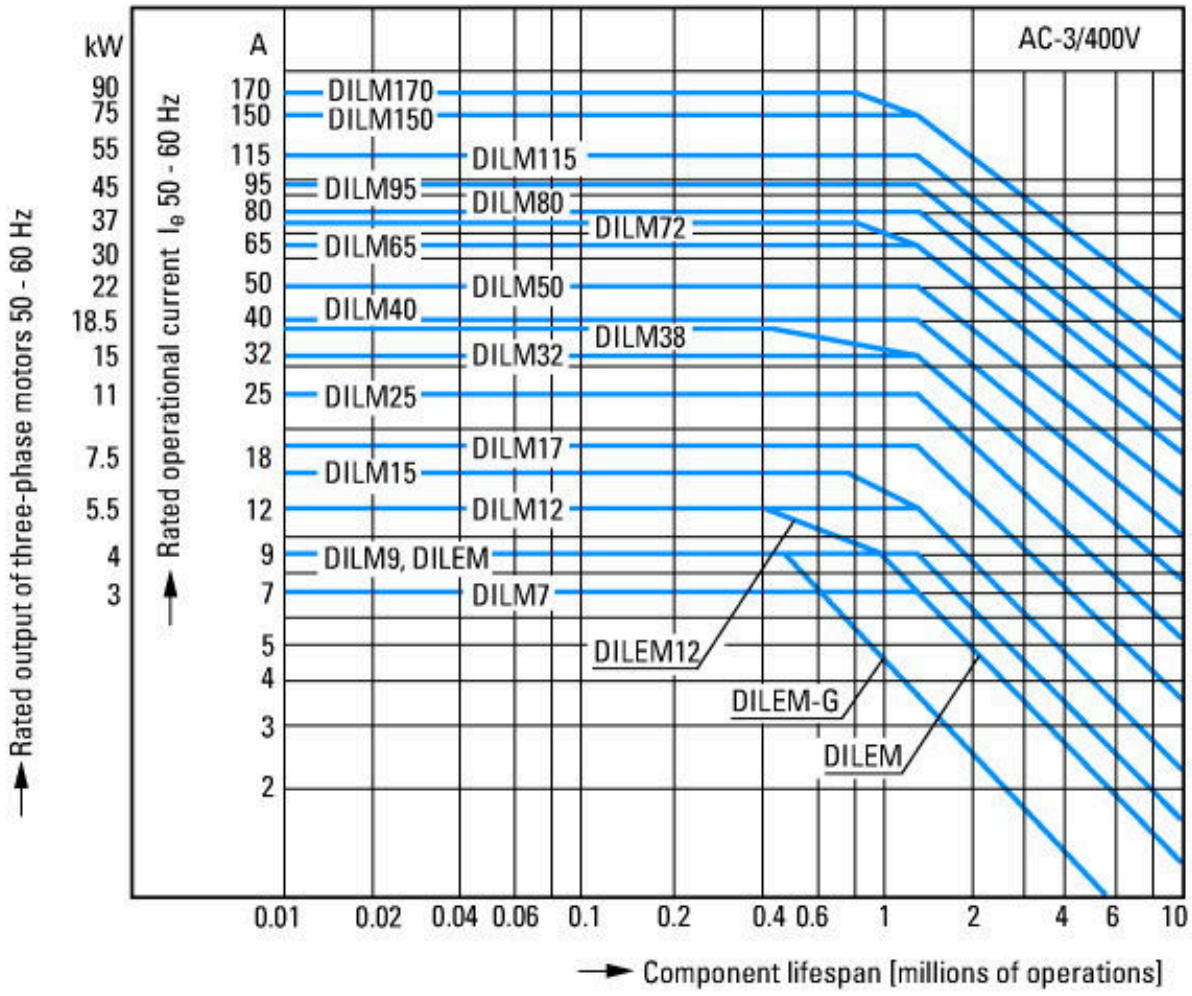

Squirrel-cage motor
Operating characteristics
Starting:from rest
Stopping:after attaining full running speed
Electrical characteristics
Make: up to 6 x rated motor current
Break: up to 1 x rated motor current
Utilization category
100 % AC-3
Typical applications
Compressors
Lifts
Mixers
Pumps
Escalators
Agitators
Fans
Conveyor belts
Centrifuges
Hinged flaps
Bucket-elevators
Air conditioning system
General drives in manufacturing and processing machines

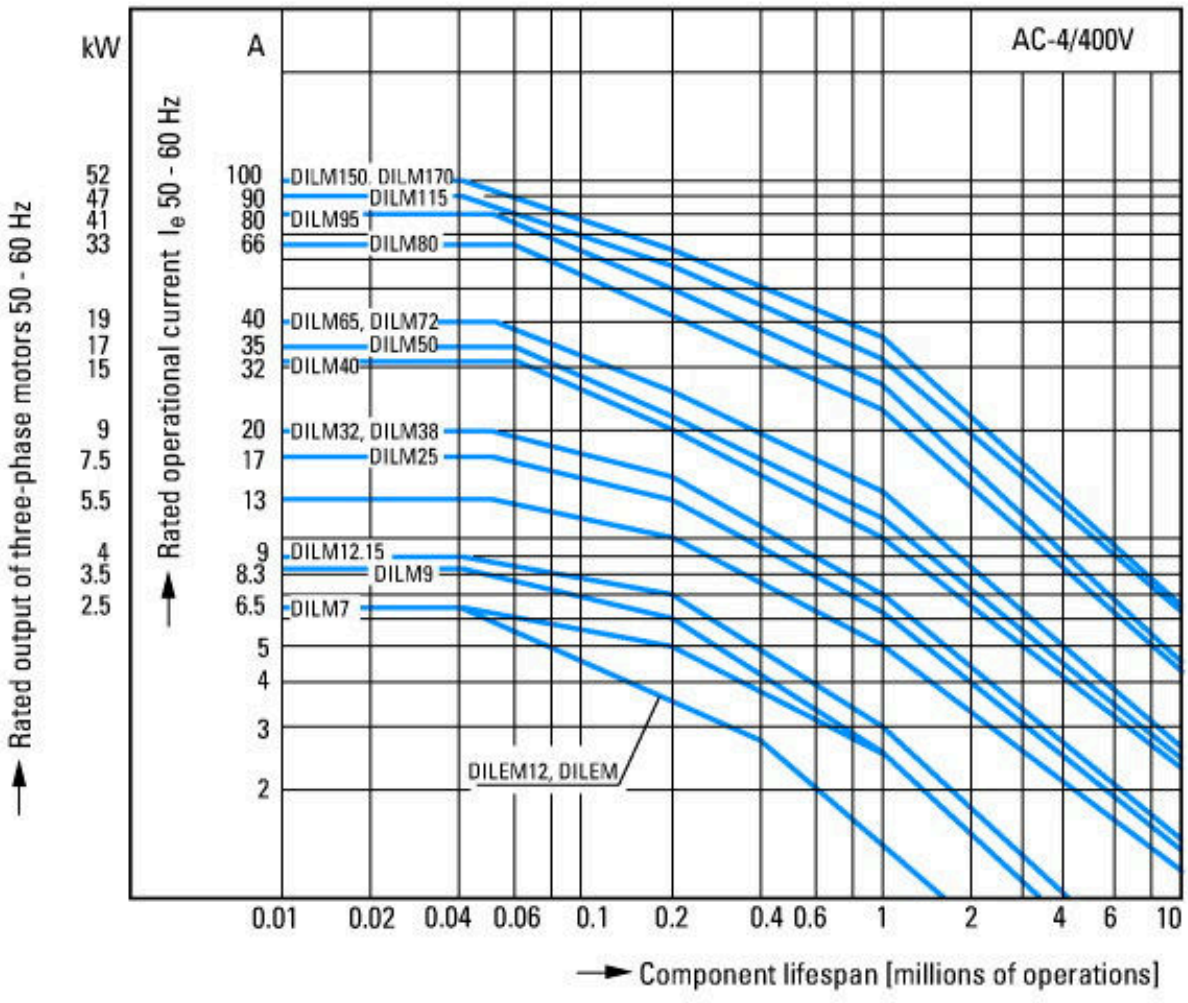

Extreme switching duty
Squirrel-cage motor
Operating characteristics
Inching, plugging, reversing
Electrical characteristics
Make: up to 6 x rated motor current
Break: up to 6 x rated motor current
Utilization category
100 % AC-4
Typical applications
Printing presses
Wire-drawing machines
Centrifuges
Special drives for manufacturing and processing machines

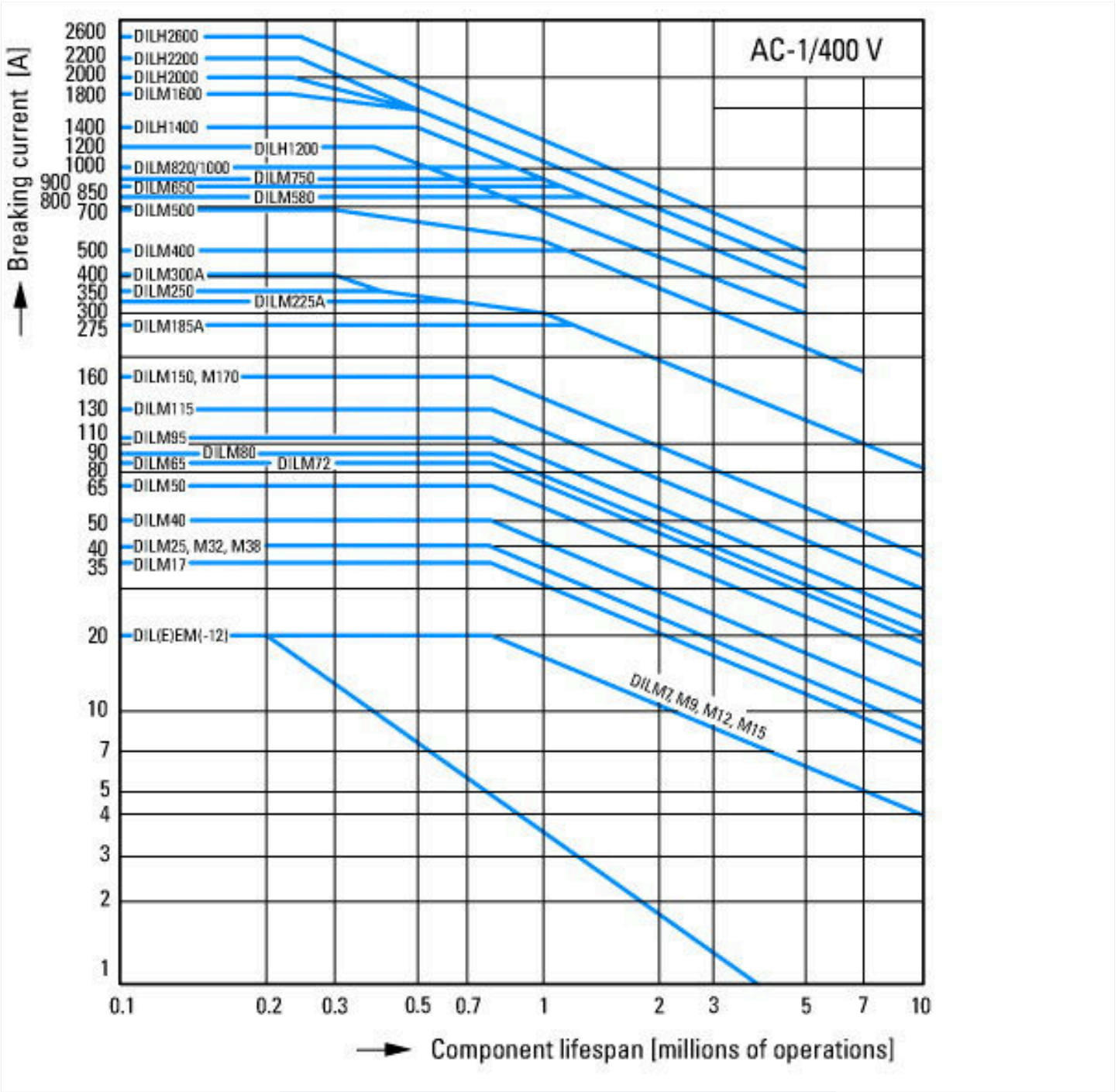

Switching duty for non-motor loads, 3-pole, 4-pole
Operating characteristics
Non-inductive or slightly inductive loads
Electrical characteristics
Make: 1 x rated current
Break: 1 x rated current
Utilization category
100 % AC-1
Typical applications
Electric heat

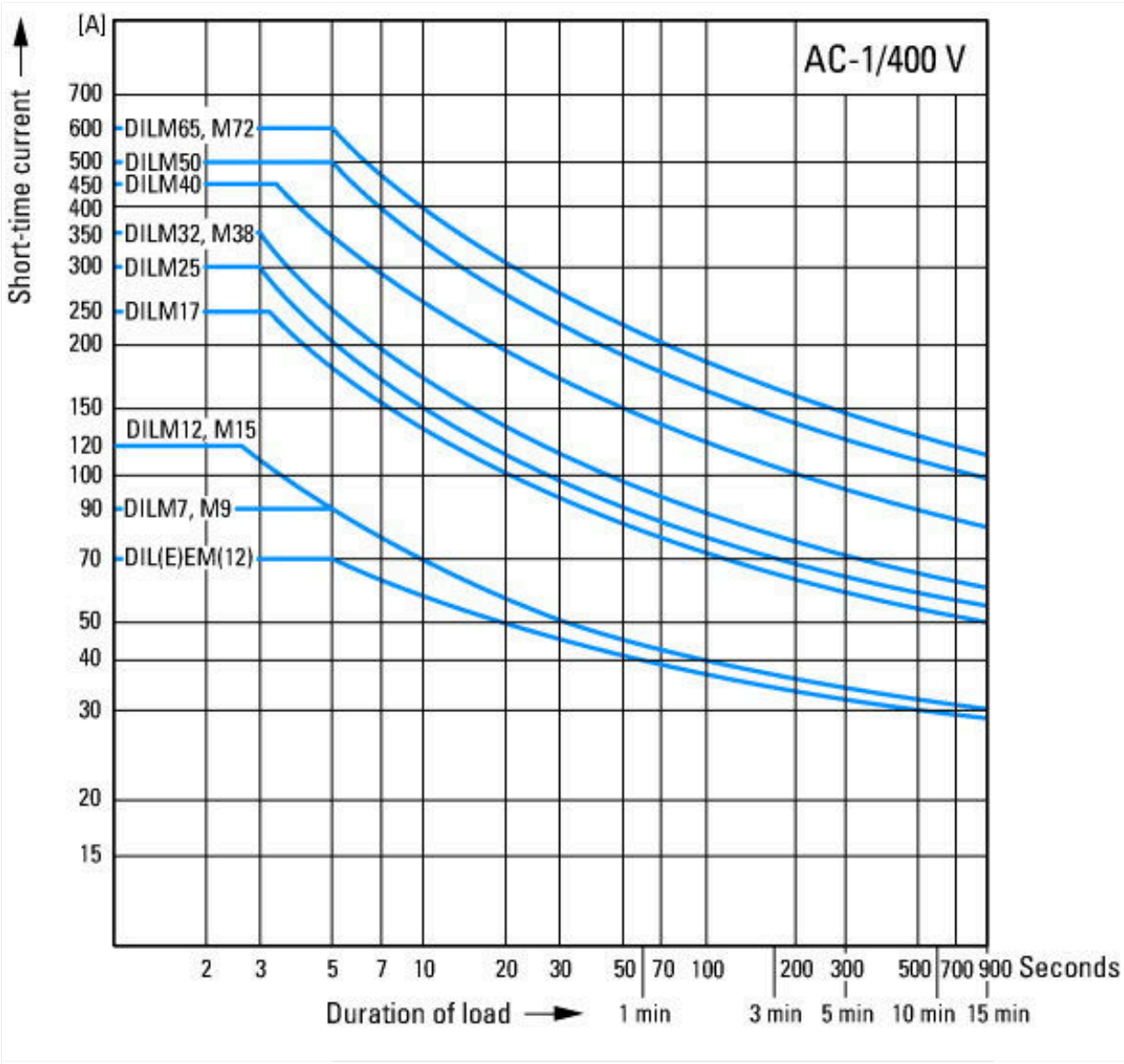

Short-time loading, 3-pole
Time interval between two loading cycles: 15 minutes

Dimensions

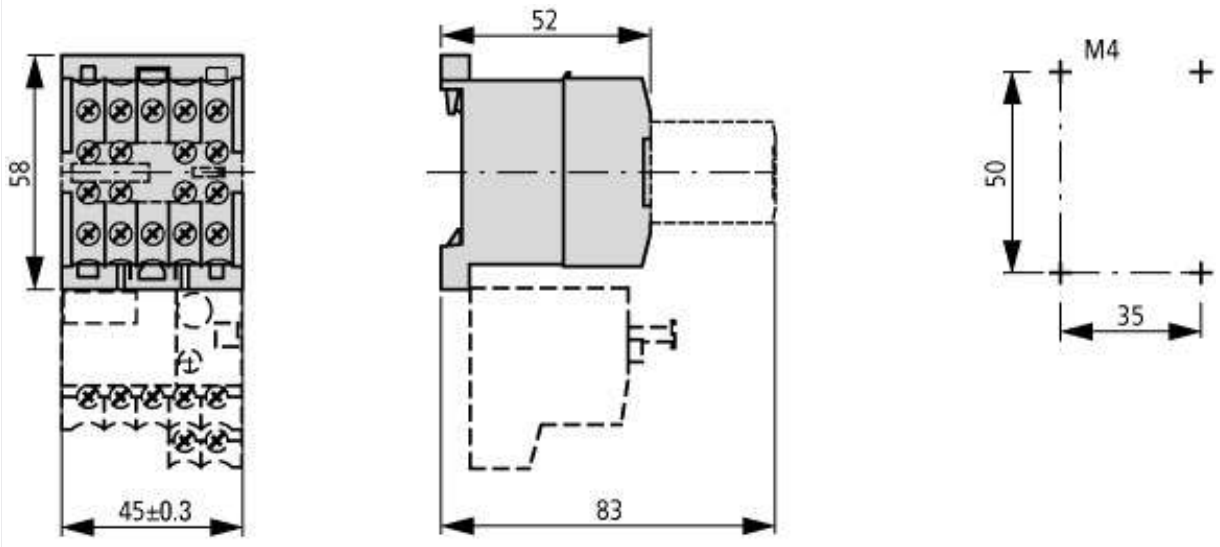

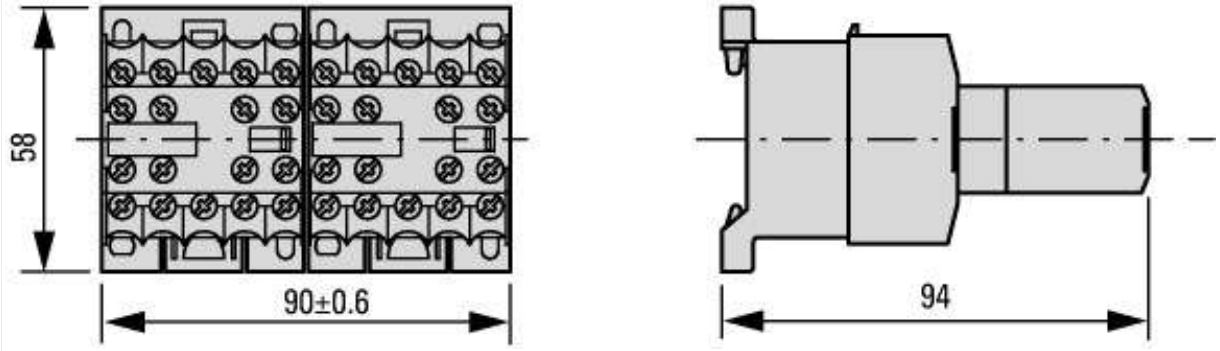

2DILE-… + MVDILE + …DILE
2DILE-…-G + MVDILE + …DILE

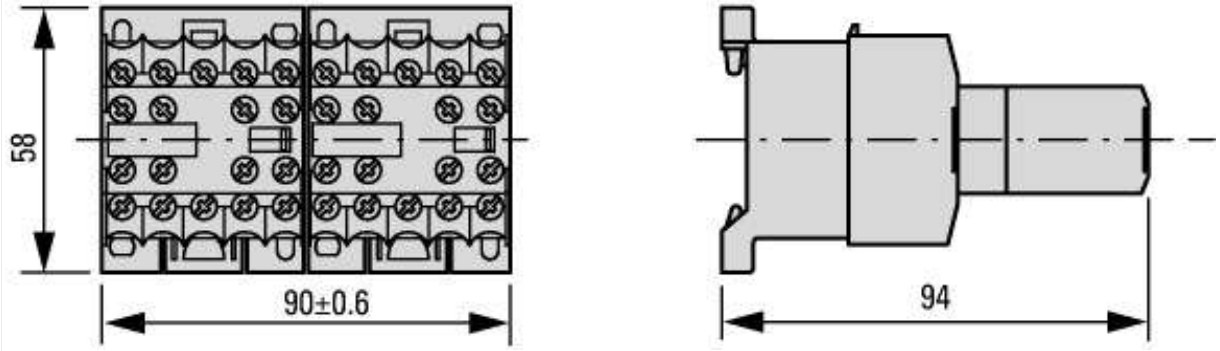

2DILE-… + MVDILE + …DILE
2DILE-…-G + MVDILE + …DILE

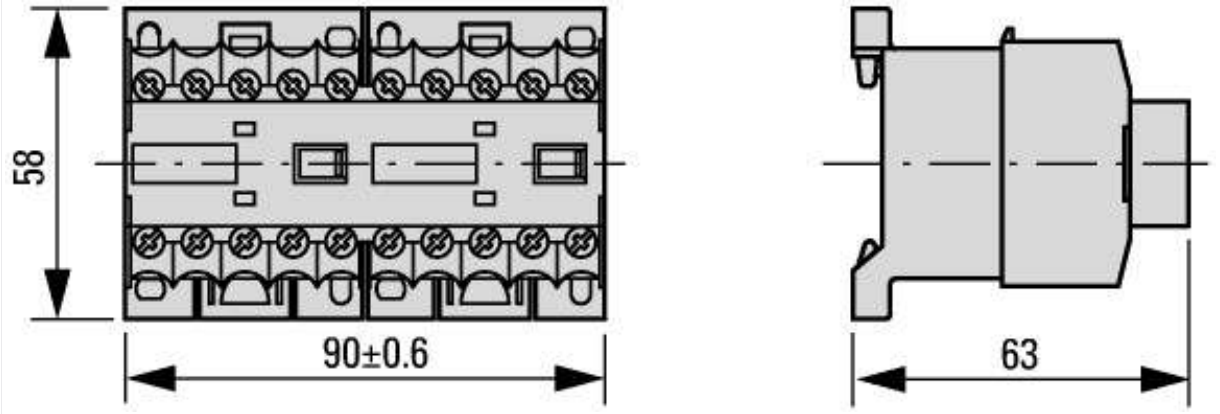

2DILE-… + MVDILE
2DILE-…-G + MVDILE

Assets (links)

Declaration of CE Conformity

00003110

Instruction Leaflets

IL03407009Z2018_04

© 10/2019 by Eaton Industries GmbH