Safety interlocking switch with solenoid lock

Intended use
PSEN me1 safety switches are interlocking devices equipped with a solenoid operated guard lock. When used together with a suitable machine control system these switches also monitor the position of movable guards. When correctly installed the PSEN me1 ensures that movable machine guards can only be opened when it is safe to do so. Machine start-up, which could cause hazardous situations, is only possible if the movable machine guards are duly closed and the PSEN me1 locking device is latched in position.

Standards governing installation and operation: EN 954-1 safety-related parts of control systems
EN 1088 interlocking devices with and without movable machinery guards
EN 60 204-1 electrical equipment of industrial machinery

Risk assessment at the machine acc. to: EN 954-1 safety-related parts of control systems
EN 1050 safety of machinery, risk assessment

The **mounting position** is flexible, however the position should: 1- Allow authorized personnel to access the manual lock over-ride in order to control and, if necessary, exchange components. 2- Ensure that foreign objects cannot enter the actuator opening whilst the guard is open.

Sequence of installation:

⚠ Installation by trained and qualified personnel only!

1. Select actuator head alignment

approach direction / 4 x 90° rotation / secured with single-way screw)

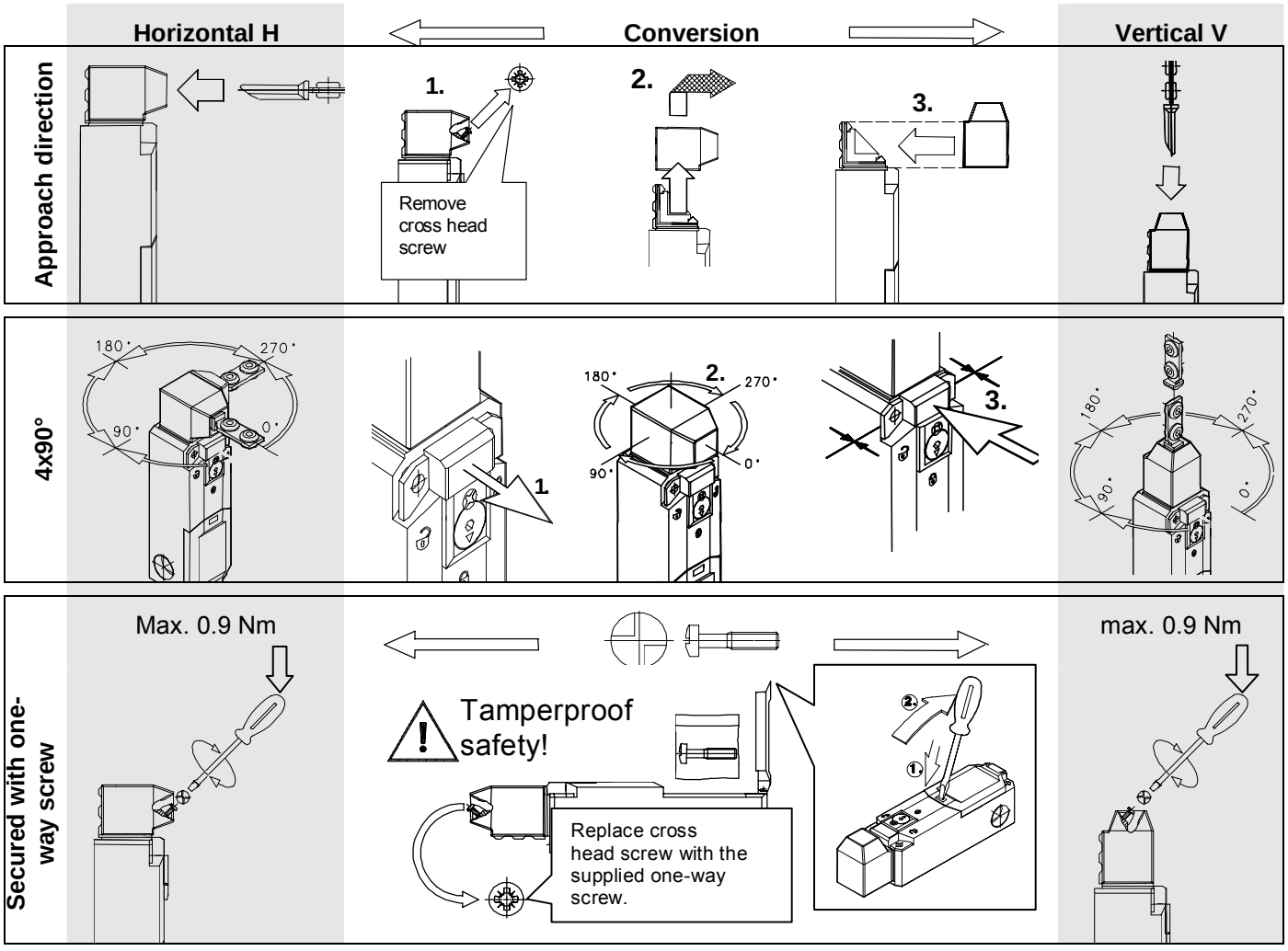

Excess of the maximum torque of 0.9 Nm or installing the actuator so that it is subject to lateral forces may damage the actuating mechanism of the switch gear. This can render the personal protection function useless and cause serious injury or accidental death. Never use the safety switch and actuator as an end stop!

Pilz GmbH & Co. KG, Sichere Automation, Felix-Wankel-Straße 2, D-73760 Ostfildern, Deutschland
Phone: +49 711 3409-0, Fax: +49 711 3409-133, E-Mail: techsupport@pilz.de, www.pilz.com

2.1 Securely fasten switching device; see illustrations for dimensions (mounting surface must be flat and plane).
2.2 Slide actuator into housing until the upper edge of the actuator is flush with the edge of the housing. Align the actuator with the machine guard so that opening or closing the machine guard does not apply lateral force to the actuator head. Verify by opening and closing the guards several times.
2.3 Permanently mount the actuator to the machine guard using rivets or single-way screws.

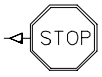

Approach direction H / Approach direction V

Actuator 1AS
(Standard)

Use ∅12 washers for M4 screws (ISO7093/DIN 9021) for form-fit installation.!

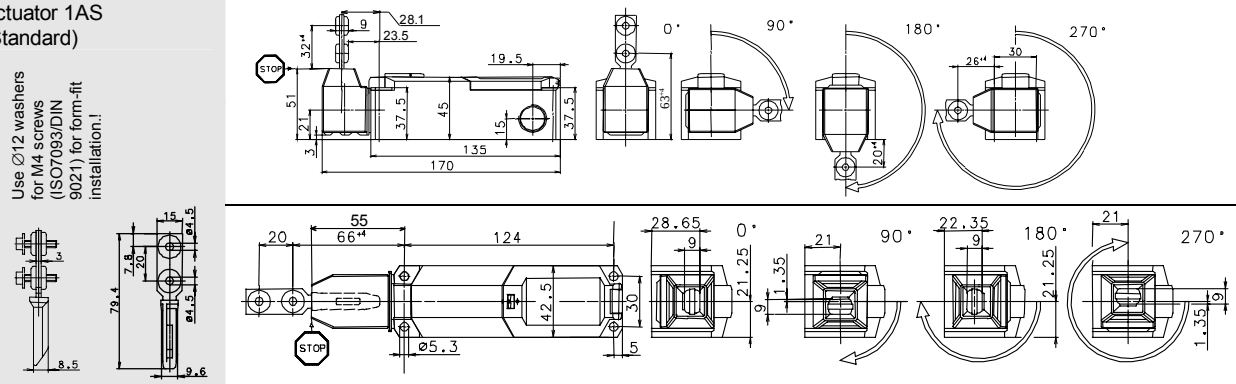

Approach direction H / Approach direction V

Actuator 1AR
(Universal)

Socket-head screw DIN912, size 2.5

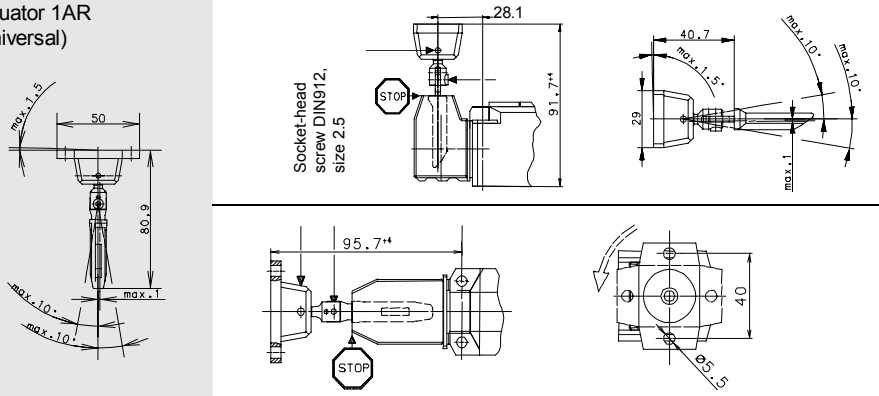

In order to maintain the maximum level of safety, always order and use actuators together with the correct safety switches.

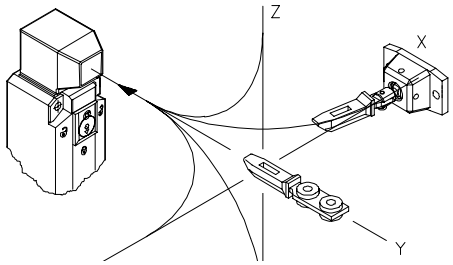

Actuator 1AS	R min > 400 mm
Actuator 1AR	R min > 150 mm

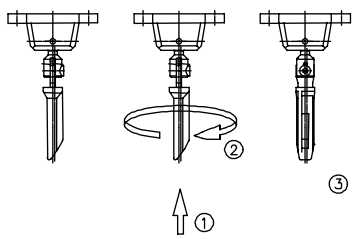

Actuator 1AR: Change of mounting flange only prior to installation

Pilz GmbH & Co. KG, Sichere Automation, Felix-Wankel-Straße 2, D-73760 Ostfildern, Deutschland
Phone: +49 711 3409-0, Fax: +49 711 3409-133, E-Mail: techsupport@pilz.de, www.pilz.com

Mechanical data

Enclosure	thermoplastic glass fibre reinforced (UL94-VO)	Mechanical life	1 million switching cycles at max. 600 cycles/hour
Cover	thermoplastic glass fibre reinforced (UL94-VO)	Mounting	4 M 5 screws ISO1207 ISO 4762
Actuator head	thermoplastic glass fibre reinforced and Zn-GD	Tightening torque (max.)	M= 2 Nm
Separate actuator	St/PA / Zn-GD	Conductor cross-section Termination cage clamp	1.5 mm² flex max.
Ambient air temperature	-25 °C to +70 °C, -13 °F to +158 °F	Cable entry	3 (M20X1.5)
Locking force F_{Zh}	max. 1500 N According to GS-ET-19	Mounting position	any orientation
		Weight	approx. 0.3 kg (w/o actuator)
Actuating force	27 N min.		
Actuating speed	V=0.5 m/s max.		

Electrical connection

⚠ The electrical connection shall only be carried out by trained and qualified personnel!

I Release snap-shut terminal lid with a screwdriver

II Screw cable gland into the chosen entry, this will 'break-out' blind hole, remove plastic disk.

Connecting to cage clamp terminals:

1) Insert screwdriver (blade width 2.5 mm) in lower opening

2) Turn 45°

3) Insert flex. cable in upper opening (Max. 1.5 mm^2 cross-section) remove screwdriver.

III Snap terminal chamber lid shut

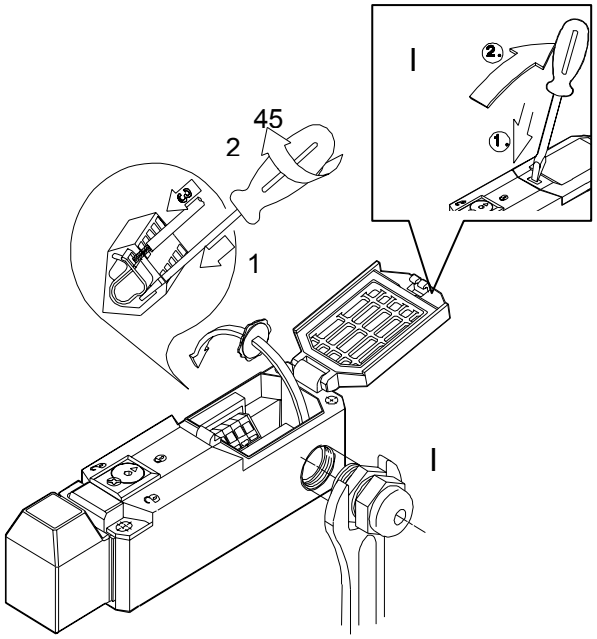

Electrical data

Protection class		IP 67 acc. to IEC 60529	Approvals		see label on housing
Switch function		4 slow-action contacts max.			BG (GS-ET-19) (applied for)
Rated insulation voltage		U_i 250V			cCSAus B300, R300 (applied for)
Utilization category		AC 15 230V/2.5 A			
Conventional thermal current		I_{the} 2.5 A	Standards		VDE 0660 T100, EN 60947-1
Max. making current (4 contacts)		10 A			VDE 0660 T200, EN 60947-5-1
Type of short-circuit protection		4 A gl			IEC 60947-5-1 GS-ET-19
Solenoid					
Actuating cycles permanent		600 / hour	Solenoid power consumption	PSEN me1	15 VA (0.5 s) inrush
Operating voltage	PSEN me1	24 V AC/DC			≤ 1.4 VA (24 V) continuous
	PSEN me1.1	24 V DC +24/110/230 V AC		PSEN me1.1	56 VA (0.2 s) inrush
ON period		100 % duty cycle (to E1, E2)			1.1 VA continuous
Temperature class		B (130 °C), (266 °F)			

Pilz GmbH & Co. KG, Sichere Automation, Felix-Wankel-Straße 2, D-73760 Ostfildern, Deutschland
Phone: +49 711 3409-0, Fax: +49 711 3409-133, E-Mail: techsupport@pilz.de, www.pilz.com

I	II	III
Actuator inserted and locked (guard closed and locked)	Actuator inserted and unlocked (guard closed but unlocked)	Actuator withdrawn (guard open)
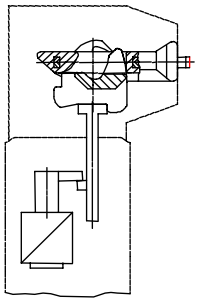	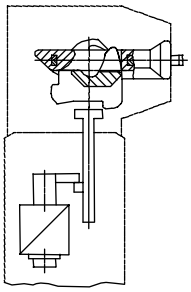	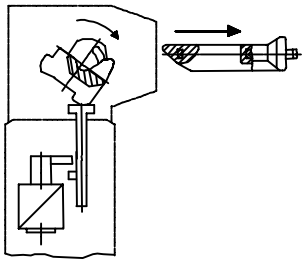

Switching function safety guard

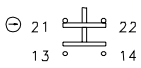	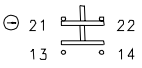	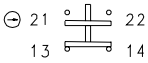

Switching function locking device (solenoid)

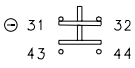	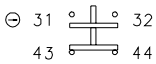	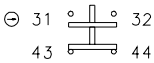

PSEN me1S
PSEN me1.1S

Locking principle : Spring lock (without power)

The safety guard is automatically locked when the actuator is correctly inserted. Supplying power to the solenoid unlocks the protective system and the safety guard can then be opened.

PSEN me1M

Locking principle : magnetic force (With power applied)
The locking device is only activated when power is applied to the solenoid. NB. If there is a power failure or there is a trigger error, the safety guard can be opened.

Standard circuit
PSEN me1

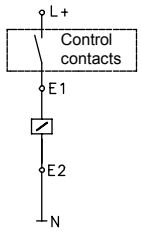

E1: Operating voltage L+

E2 : Neutral N

Manual lock override
PSEN me1S
PSEN me1.1S

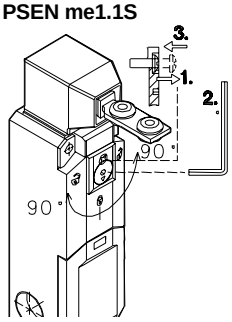

1. Loosen locking screw.
2. Rotate over-ride cam 90° with Allen key.
   The actuator can now be withdrawn.
   Rotate over-ride cam back to original position.
3. Screw and tighten locking screw and seal with sealing lacquer. (M = 0.5 Nm)

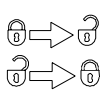

The manual lock over-ride should only be used with a 3mm socket screw key if the guard locking device fails.

The access point shall be sealed after installation.
(e.g. with sealing lacquer)

Pilz GmbH & Co. KG, Sichere Automation, Felix-Wankel-Straße 2, D-73760 Ostfildern, Deutschland
Phone: +49 711 3409-0, Fax: +49 711 3409-133, E-Mail: techsupport@pilz.de, www.pilz.com

System description / Suggested application

When the machine guard is closed, the actuator is engaged and locked in the safety switch. In this state the safety outputs in the safety control module are closed and the contact in the control module (for the solenoid) is open - the machine can now operate.
In order to carry out maintenance work behind the safety guard the operator has to switch off the machine. This will cause opening of the outputs of the control module and shutoff of the machines power line. As the dangerous movement of the machine may not stop immediately, the safety switch lock should only release the actuator after the machine has come to a complete stop. A suitable control module, e.g. a lost-motion monitor or a delay module (safety timer) can be used for that purpose.

The safety contacts (force disconnected N.C.) inhibit the machine from restarting whilst the machine guard is open. The additional N.O. contacts can be used as signaling contacts, they do not have a safety function and are normally used for indication only. These functions do not conduce safety, just availability of machinery. When used in conjunction with suitable control modules the NO contacts may be used only for additional verification of the safety circuit.

The set of contacts monitoring the safety guard is form-fit driven by the actuator, so that the position of the safety guard is directly monitored. The set of contacts monitoring the locking device has a positive drive connection to the lock. Thus ensures that any failure of the locking device will be immediately detected by the safety control system. An integrated mechanical mechanism ensures that the lock cannot be engaged whilst the actuator is removed from the safety switch.

The safety switch PSEN me1 can be applied in combination with other safety switching devices and safety control modules in systems up to control category 4 acc. to DIN EN 954-1 when the applicable standards are maintained.

Maintenance / Inspection
The switching device is maintenance-free. For trouble-free operation and a long service life the device should be inspected regularly. Ensure that:
- all components are secure and tight
- switching functions operate properly
- all sealing gaskets are in proper condition
- the components show no signs of tear and wear.

If defects are the detected the complete switching device and the actuator have to be replaced.

Liability disclaimer
By breach of the given instructions (concerning the intended use, the safety instructions, the installation and connection through qualified personnel and the testing of the safety function) any liability expires.

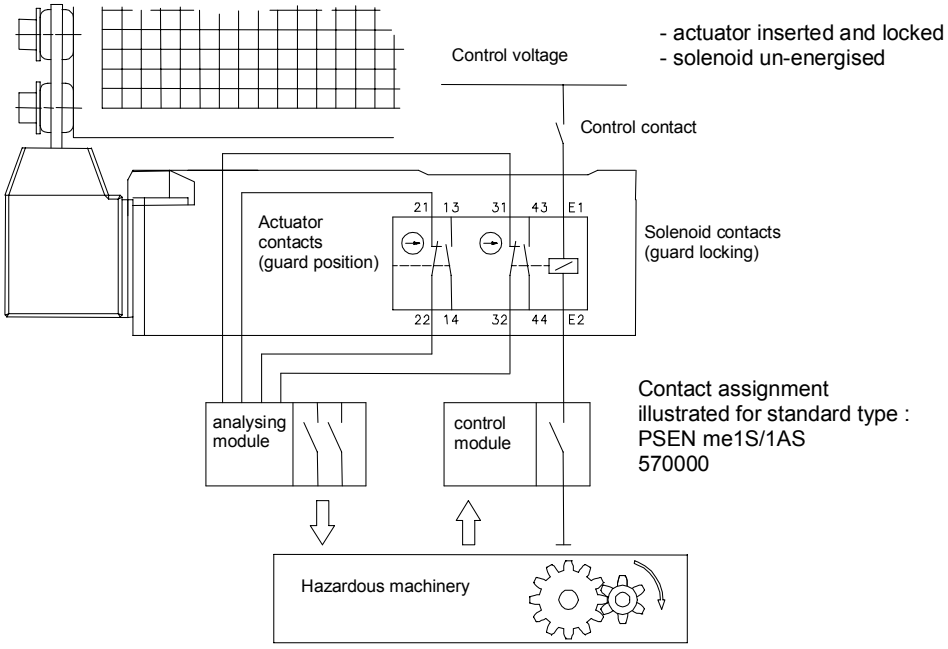

Pilz GmbH & Co. KG, Sichere Automation, Felix-Wankel-Straße 2, D-73760 Ostfildern, Deutschland
Phone: +49 711 3409-0, Fax: +49 711 3409-133, E-Mail: techsupport@pilz.de, www.pilz.com

Pilz GmbH & Co. KG, Sichere Automation, Felix-Wankel-Straße 2, D-73760 Ostfildern, Deutschland
Phone: +49 711 3409-0, Fax: +49 711 3409-133, E-Mail: techsupport@pilz.de, www.pilz.com