AC5211

ClassicLine 2DI 2DO-Y IP67

Bus system AS-Interface

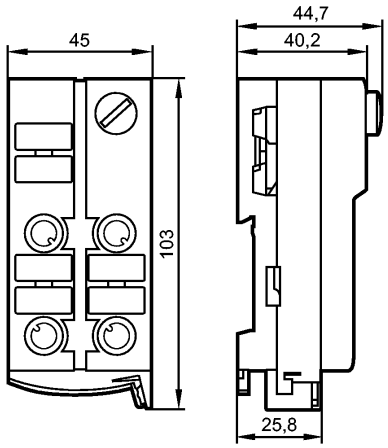

Made in Germany

Product characteristics

Active ClassicLine module

AS-i flat cable connection

Sockets M12 x 1

Addressing socket

Three orientations of the flat cable are possible

Digital inputs and outputs (2 A)

Electrical data

Electrical design		2 inputs / 2 outputs
Operating voltage	[V]	26.5...31.6 DC; "supply class 2" to cULus.
Total current consumption from AS-i	[mA]	< 150
Max. current load per module	[mA]	4000

Inputs

Digital

Circuit		DC PNP
Sensor supply		AS-i
Voltage range	[V]	18...30 DC **)
Max. current load for all inputs total	[mA]	100
Input current High/Low	[mA]	6…10 / 0…2
Switching level High signal 1	[V]	> 11
Short-circuit proof		yes

Outputs

Digital

Output function		transistor PNP
Voltage range	[V]	24 DC (15...30 DC) **)
External voltage supply		according to PELV
Max. current load per output	[mA]	2000 *)
Electrically separated		yes
Integrated watchdog		yes
Short-circuit proof		yes

Environment

AC5211

ClassicLine 2DI 2DO-Y IP67

Bus system AS-Interface

Ambient temperature	[°C]	-25...70
Protection		IP 67

Tests / approvals

EMC		EN 50295 IEC 61000-6-2
MTTF	[Years]	188

AS-i classification

AS-i version	2.11 + 3.0
Extended addressing mode possible	no
AS-i profile	S-3.0.E
I/O configuration [hex]	3
ID code [Hex]	0.E
AS-i certificate	in preparation

Data bits

Data bit	D0	D1	D2	D3
Input	1	2	-	-
Socket	I-1	I-2	-	-
Pin	2+4	2+4	-	-
Output	-	-	3	4
Socket	-	-	O-3/4	O-3/4 O-4
Pin	-	-	4	2 4

Mechanical data

Housing materials		PA; Piercing contacts: CuSn6 surface nickel and tin-plated
Weight	[kg]	0.193

Displays / operating elements

Operation	LED	green
Error	LED	Red
Function display	LED	yellow

Electrical connection

Wiring

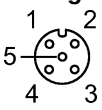

Inputs
1: Sensor supply L+
2+4: Data input (internally linked)
3: Sensor supply L-
5: not used

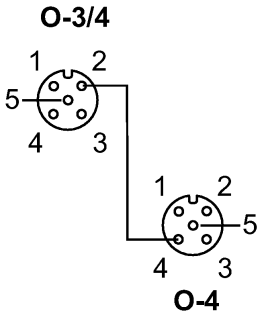

Outputs
1: not used
Socket O-3/4
2: Switching output 4
3: External voltage AUX
-
4: Switching output 3
5: not used

Socket O-3
1: not used
2: not used
3: External voltage AUX
-
4: Switching output 4
5: not used

Accessories

Accessories (included)	lower part
Accessories (optional)	M12 protective cap (E73004)

Remarks

Remarks	Inputs and outputs must be electrically isolated. Do not connect any of the points I-, I+, I1, I2 to an external potential since they are electrically connected to the AS-i cable. *) Utilisation category (DC13): The making and breaking capability for triggering solenoids is rated up to 40 W (to IEC 60947-5-1) **) via flat cable
Pack quantity [piece]	1