LAPP GROUP	**DATA SHEET**	54110840
	SKINTOP® BRUSH ADD-ON	valid from: 30.11.2015

The SKINTOP® BRUSH ADD-ON is an optimum low-resistance 360°screen contact. Cutting edges cut through the insulating layer of the Housing or switch cabinets, thus guaranteeing an optimum EMC contact. Easy disassembling, visible, large-scale screen contact.
Application: For EMC-compliant earthing of the copper braiding, or for cables with copper shaft sheath. For EMC-contact inside bore-holes. Control cabinet manufacturing, Automation Systems, Conveyor and transport systems.



Components:

Adapter	Brass, nickel-plated
Brush	Brass wire

Technical features:

Connecting thread	M16x1,5 up to M63x1,5 acc. to EN 60423
Temperature range	-70 °C up to +200 °C
Transfer impedance	≤ 10 mOhm
Corrosion-protection class	C4

Norm references:

RoHS ✓ CE

For more information please see our current catalogue.

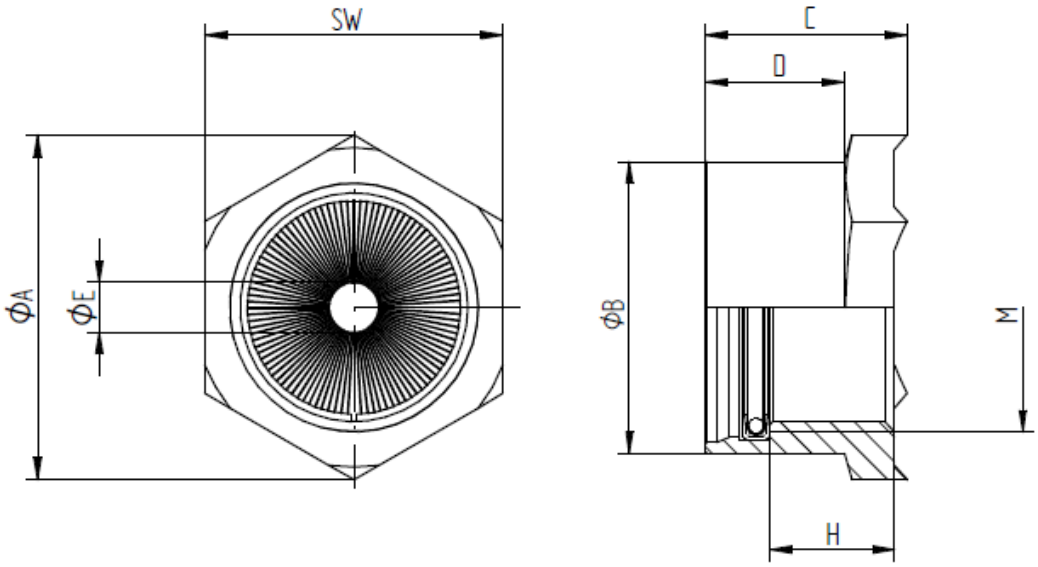

M	SW [mm]	Ø A [mm]	Ø B [mm]	C [mm]	D [mm]	Ø E min. [mm] over braiding	H [mm]	Article No.
M12x1,5	24	27,7	23,5	16,3	10,3	4	10	54110839
M16x1,5	24	27,7	23,5	16,3	10,3	4	10	54110840
M20x1,5	24	27,7	23,5	16,3	10,3	4	10	54110841
M25x1,5	30	34,6	29,7	16,3	10,3	5	10	54110842
M32x1,5	39	45,0	38,0	18,5	12,5	6	12	54110843
M40x1,5	47	54,2	46,7	18,5	11,5	10	12	54110844
M50x1,5	56	64,6	55,8	18,7	11,7	12	12	54110845
M63x1,5	63	76,2	65,8	20,0	13,0	16	12	54110846