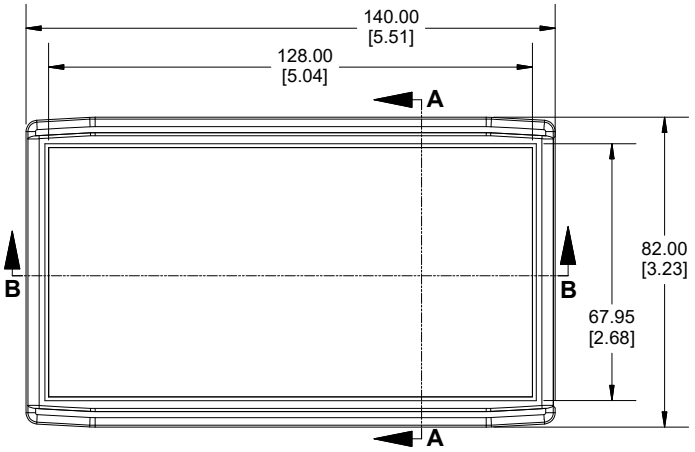

TOP VIEW

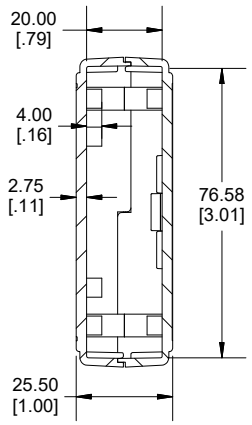

SECTION A-A

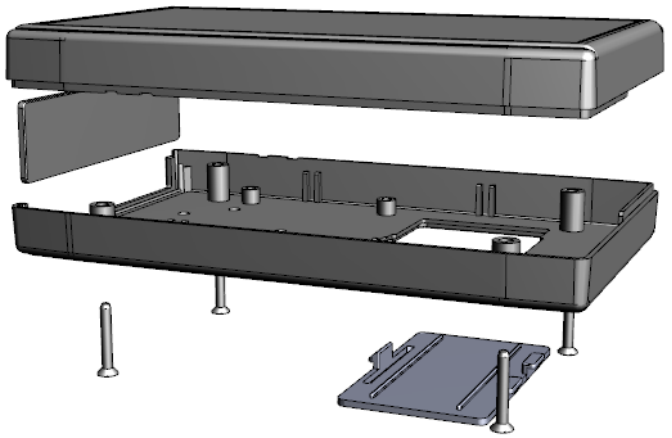

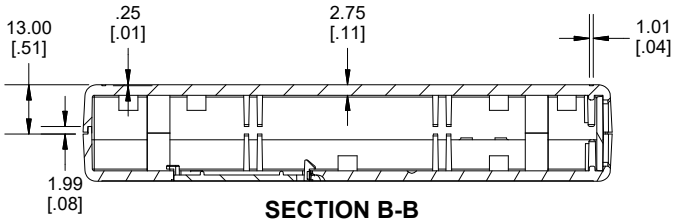

SECTION B-B

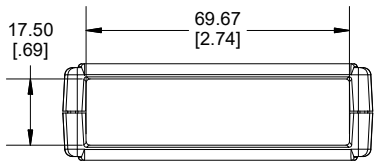

END VIEW

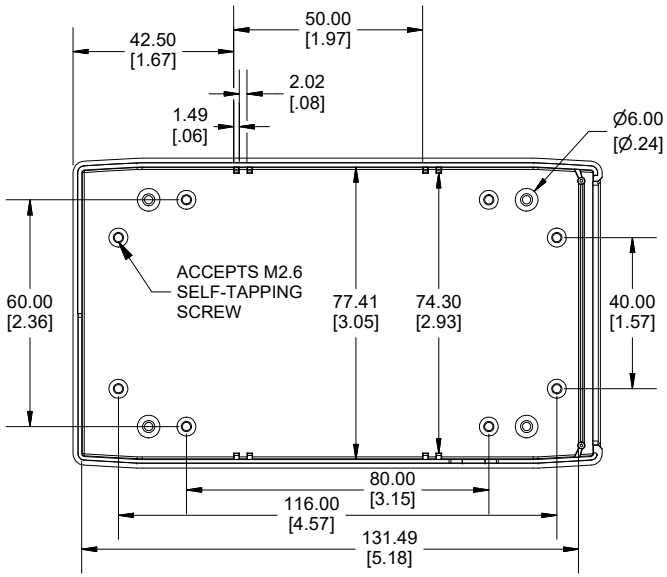

INSIDE LID

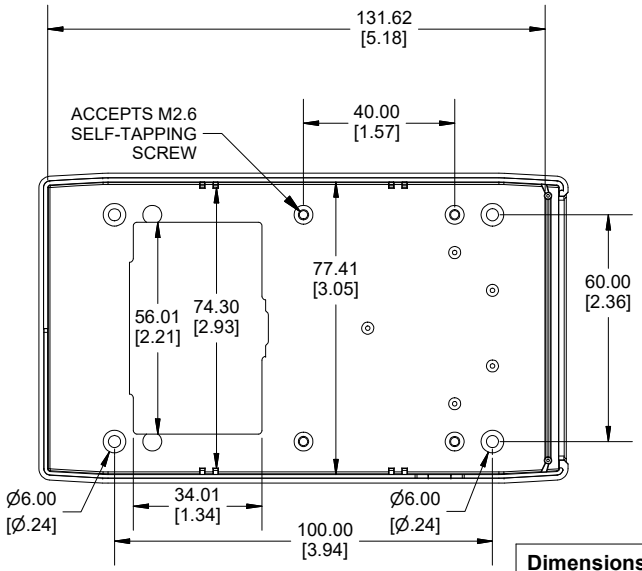

INSIDE BOX

Dimensions:
mm
[inches]

Enclosures can be Factory Modified (Milling, Drilling, Printing etc.)
Contact Factory (modshop@hammfg.com) for quotes
Solid models of this enclosure available in .stp or .x_t
(Part number and text placement/orientation on our products are subject to change, we do not recommend using them as a locating reference for modification purposes)

NOTE
Purchased assembly includes box, lid, 4 PCB screws, end panel, battery door, and 4 lid screws.
Recommended Torque : (43-50) Ozf.in / (30-35) cN.m

RH Enclosure	
General Purpose ABS Light Grey (UL94 HB)	RH3145A
ACCESSORIES	
Cover screws (M2.6 X 18mm) Self-Tapping (50 pkg)	SC520-50
PCB Screw (M2.6 X 6mm Self-tapping) (50 pkg)	SC519-50
Nylon Belt Clip Kit	CP-001G

HAMMOND MANUFACTURING®

RH3145A

www.hammondmfg.com