computar

H0514-VSW

f=5mm F1.4 ViSWIR Lite
for Visible+SWIR image sensor, Fixed-focal
C-Mount

Model No.		H0514-VSW		Effective	Front	φ27.8mm	
Focal Length		5mm		Lens Aperture	Rear	φ14.8mm	
Max. Aperture Ratio		1:1.4		Distortion	1/2type	-0.48%(y=4.0)	
Max. Image Format		6.40mm x 5.12mm(φ8.20mm)			1/3type	-2.26%(y=3.0)	
Transmittance Wavelength Range		400nm – 1700nm		Back Focal Length		10.8mm	
Operation Range	Iris	F1.4 - 16C		Flange Back Length		17.526mm	
	Focus	0.1m - 0.9m		Mount		C-Mount	
Control	Iris	Manual		Filter Size		M43 P=0.75mm	
	Focus	Manual		Dimensions		φ44.5mm x 45.5mm	
Operating Temperature		-10℃ - +50℃		Weight		102g	
Angle of View	D	IMX990	77.8°	IMX991	44.6°	1/2 type	76.7°
	H	6.40mm x 5.12mm	65.5°	3.20mm x 2.56mm	35.3°		65.5°
	V	(φ8.20mm)	54.5°	(φ4.10mm)	28.5°		51.4°

Dimensions

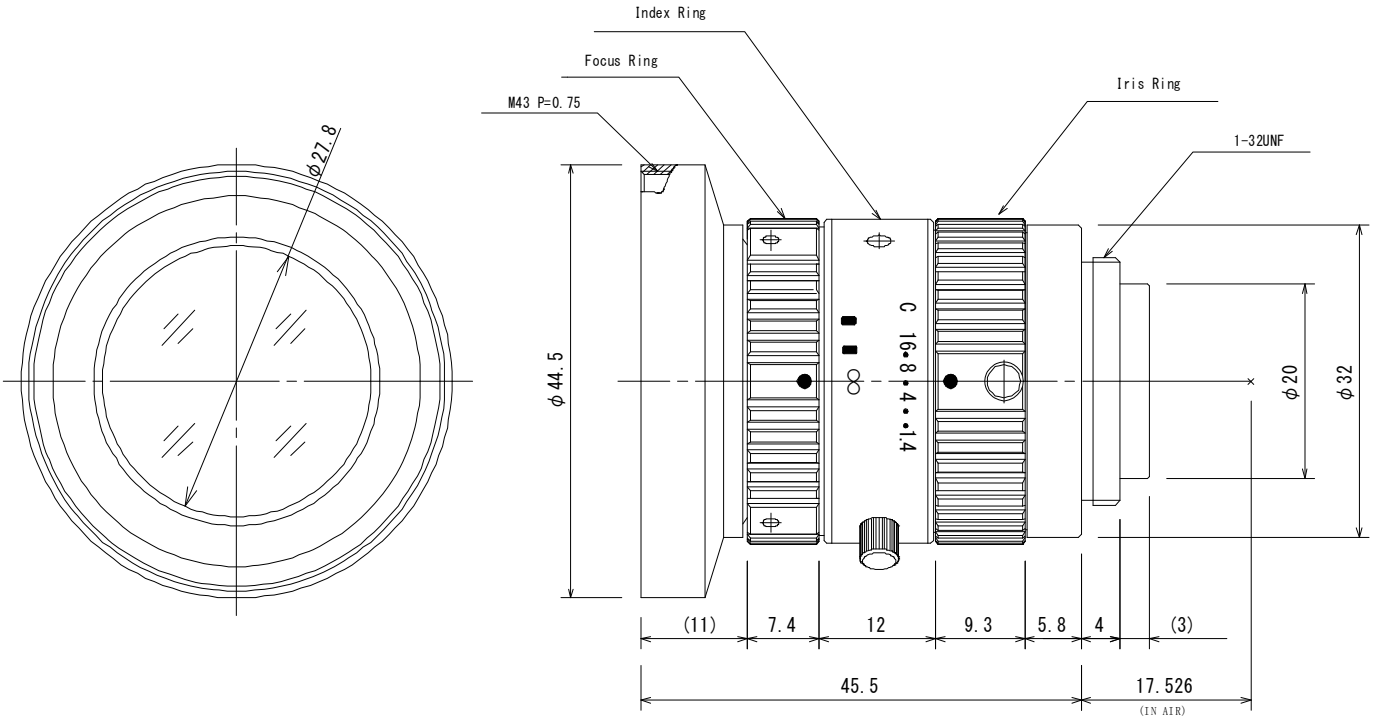

computar

M0814-VSW

f=8mm F1.4 ViSWIR Lite
for Visible+SWIR image sensor, Fixed-focal
C-Mount

Model No.		M0814-VSW		Effective	Front	φ21.5mm	
Focal Length		8mm		Lens Aperture	Rear	φ12.0mm	
Max. Aperture Ratio		1:1.4		Distotion	2/3type	-0.1%(y=5.5)	
Max. Image Format		8.8mm x 6.6mm(φ11mm)			1/2type	-1.1%(y=4.0)	
Transmittance Wavelength Range		400nm – 1700nm		Back Focal Length		13.1mm	
Operation Range	Iris	F1.4 - F16C		Flange Back Length		17.526mm	
	Focus	0.1m - Inf.		Mount		C-Mount	
Control	Iris	Manual		Filter Size		M30.5 P=0.5mm	
	Focus	Manual		Dimensions		φ33.5mm x 28.2mm	
Operating Temperature		-10℃ - +50℃		Weight		62.6g	
Angle of View	D	IMX990	53.0°	IMX991	27.9°	2/3 type	67.1°
	H	6.40mm x 5.12mm	42.5°	3.20mm x 2.56mm	21.9°		56.3°
	V	(φ8.20mm)	34.5°	(φ4.10mm)	17.6°		43.7°

Dimensions

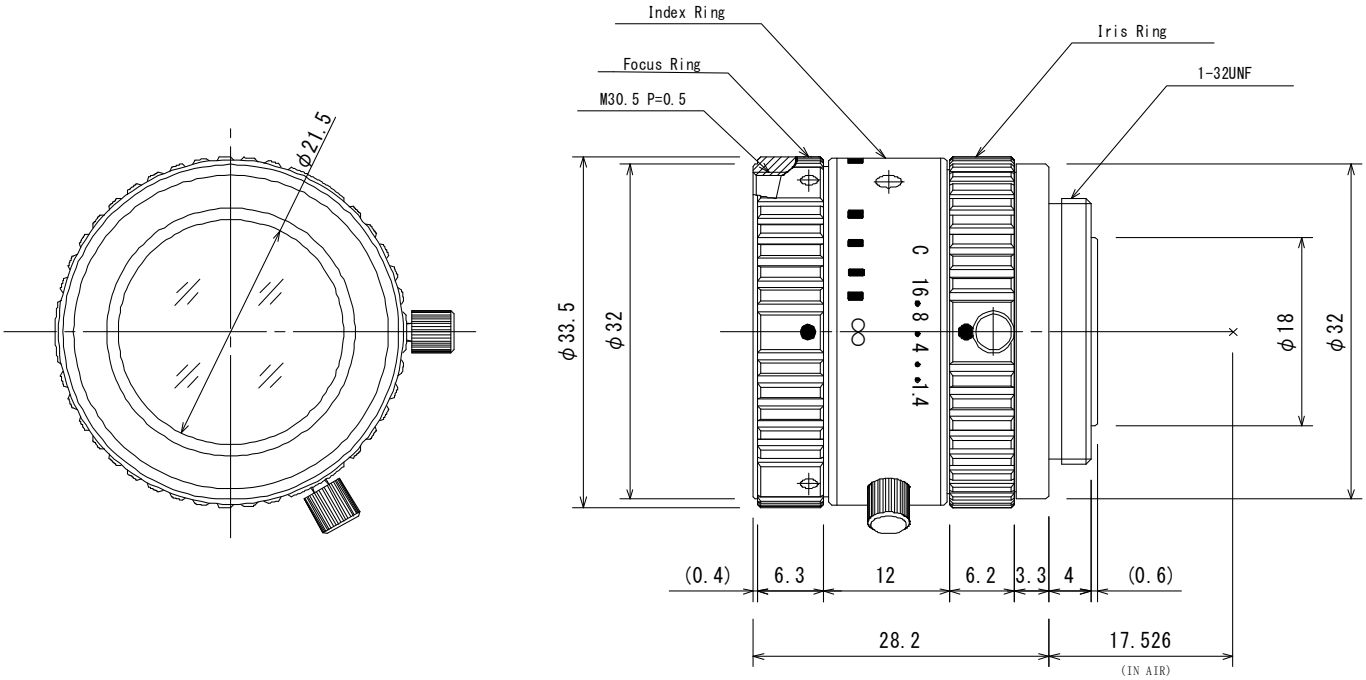

computar

M1214-VSW

f=12mm F1.4 ViSWIR Lite
for Visible+SWIR image sensor, Fixed-focal
C-Mount

Model No.		M1214-VSW		Effective	Front	φ21.0mm	
Focal Length		12mm		Lens Aperture	Rear	φ13.0mm	
Max. Aperture Ratio		1:1.4		Distortion	2/3type	-0.1%(y=5.5)	
Max. Image Format		8.8mm x 6.6mm(φ11mm)			1/2type	-0.35%(y=4.0)	
Transmittance Wavelength Range		400nm - 1700nm		Back Focal Length		13.1mm	
Operation Range	Iris	F1.4 - F16C		Flange Back Length		17.526mm	
	Focus	0.15m - Inf.		Mount		C-Mount	
Control	Iris	Manual		Filter Size		M30.5 P=0.5mm	
	Focus	Manual		Dimensions		φ33.5mm x 28.2mm	
Operating Temperature		-10℃ - +50℃		Weight		61.9g	
Angle of View	D	IMX990	37.8°	IMX991	19.4°	2/3 type	49.2°
	H	6.40mm x 5.12mm	30.0°	3.20mm x 2.56mm	15.2°		40.4°
	V	(φ8.20mm)	24.1°	(φ4.10mm)	12.2°		30.8°

Dimensions

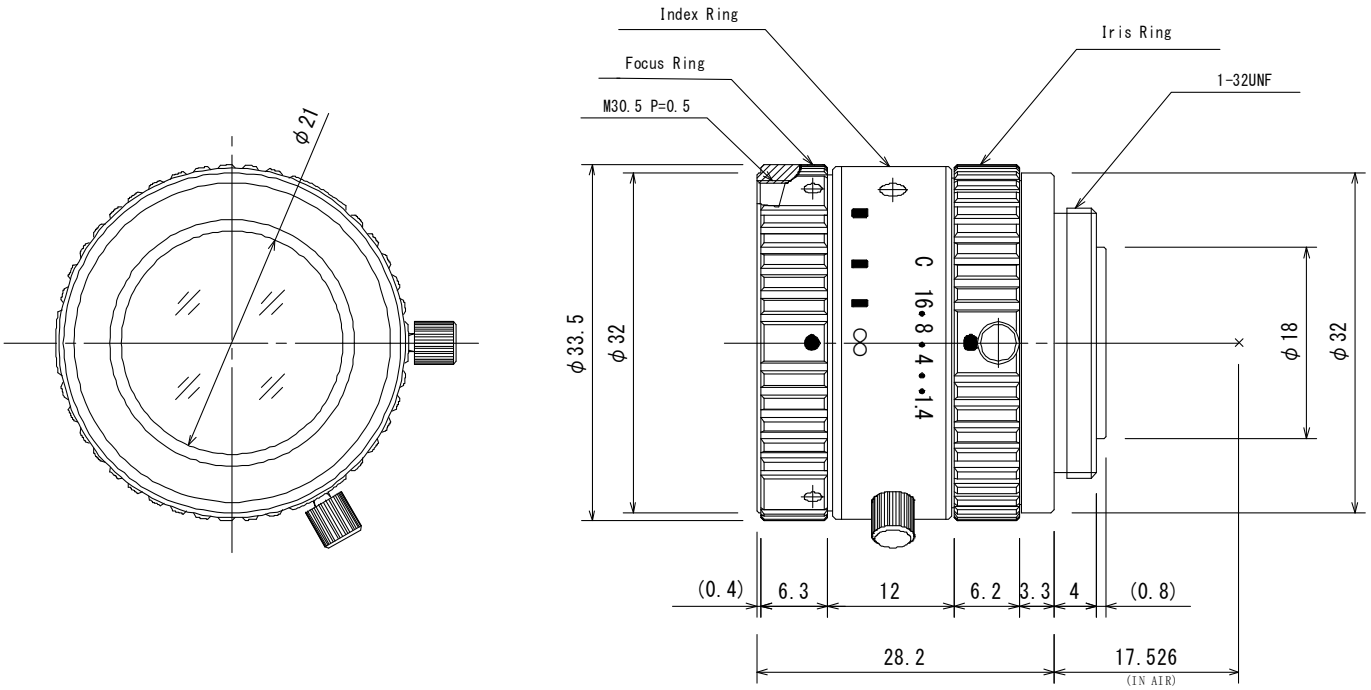

computar

M1614-VSW

f=16mm F1.4 ViSWIR Lite
for Visible+SWIR image sensor, Fixed-focal
C-Mount

Model No.		M1614-VSW		Effective	Front	φ18.5mm	
Focal Length		16mm		Lens Aperture	Rear	φ13.2mm	
Max. Aperture Ratio		1:1.4		Distortion	2/3type	-0.1%(y=5.5)	
Max. Image Format		8.8mm x 6.6mm(φ11mm)			1/2type	-0.3%(y=4.0)	
Transmittance Wavelength Range		400nm – 1700nm		Back Focal Length		13.1mm	
Operation Range	Iris	F1.4- F16C		Flange Back Length		17.526mm	
	Focus	0.3m - Inf.		Mount		C-Mount	
Control	Iris	Manual		Filter Size		M30.5 P=0.5mm	
	Focus	Manual		Dimensions		φ33.5mm x 28.2mm	
Operating Temperature		-10℃ - +50℃		Weight		60g	
Angle of View	D	IMX990 (SXGA)	28.8°	IMX991 (VGA)	14.6°	2/3 type	38.0°
	H	6.40mm x 5.12mm	22.7°	3.20mm x 2.56mm	11.4°		30.8°
	V	(φ8.20mm)	18.2°	(φ4.10mm)	9.2°		23.4°

Dimensions

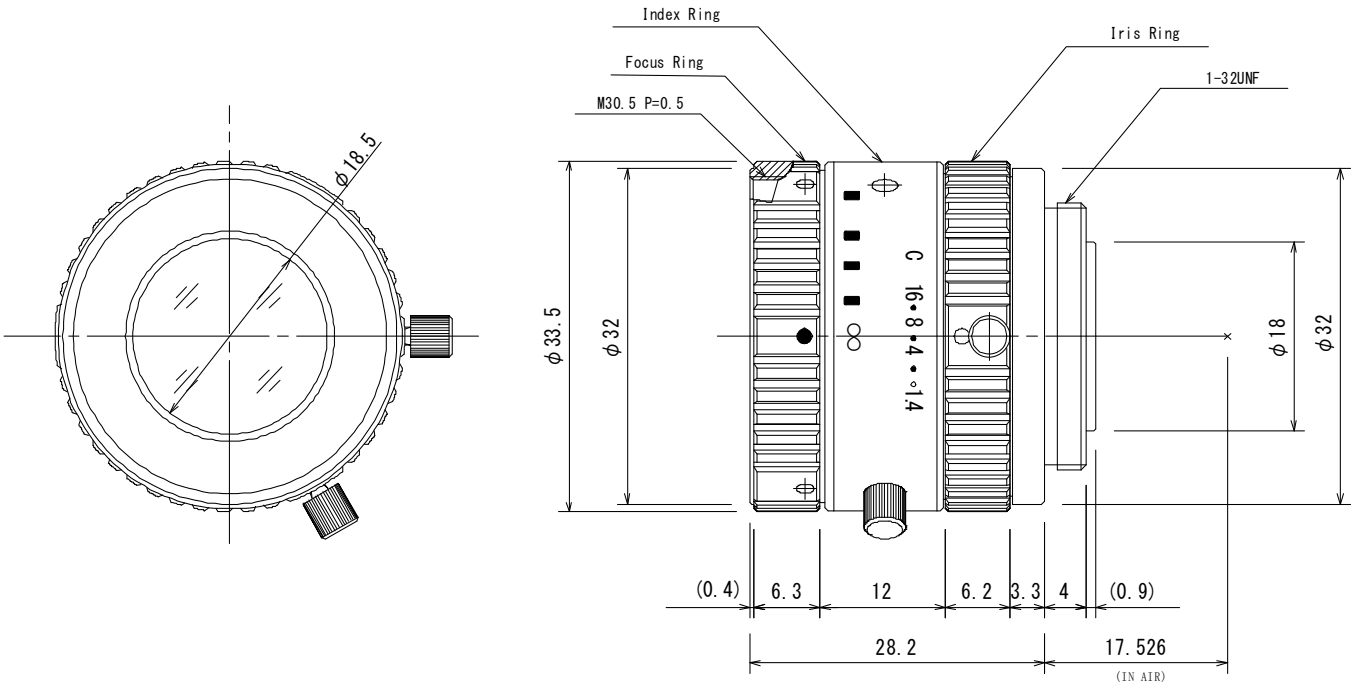

computar

M2514-VSW

f=25mm F/1.4 ViSWIR Lite
for Visible+SWIR image sensor, Fixed-focal
C-Mount

Model No.		M2514-VSW		Effective	Front	φ17.8mm	
Focal Length		25mm		Lens Aperture	Rear	φ12.0mm	
Max. Aperture Ratio		1:1.4		Distortion	2/3type	-0.3%(y=5.5)	
Max. Image Format		8.8mm x 6.6mm(φ11mm)			1/2type	-0.1%(y=4.0)	
Transmittance Wavelength Range		400nm - 1700nm		Back Focal Length		13.1mm	
Operation Range	Iris	F1.4 - F16C		Flange Back Length		17.526mm	
	Focus	0.3m - Inf.		Mount		C-Mount	
Control	Iris	Manual		Filter Size		M30.5 P=0.5mm	
	Focus	Manual		Dimensions		φ33.5mm x 36mm	
Operating Temperature		-10℃ - +50℃		Weight		71.2g	
Angle of View	D	IMX990	18.6°	IMX991	9.4°	2/3 type	24.9°
	H	6.40mm x 5.12mm	14.6°	3.20mm x 2.56mm	7.3°		20.0°
	V	(φ8.20mm)	11.7°	(φ4.10mm)	5.9°		15.1°

Dimensions

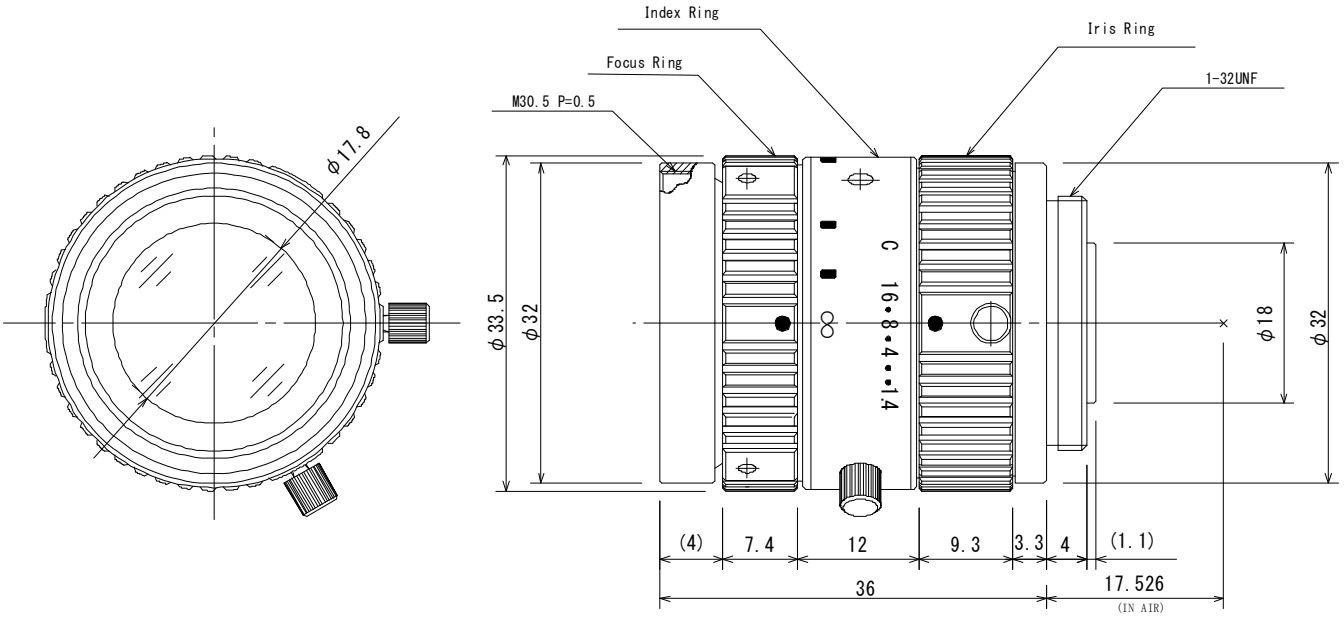

computar

M3514-VSW

f=35mm F1.4 ViSWIR Lite
for Visible+SWIR image sensor, Fixed-focal
C-Mount

Model No.		M3514-VSW		Effective	Front	φ24mm	
Focal Length		35mm		Lens Aperture	Rear	φ12mm	
Max. Aperture Ratio		1:1.4		Distortion	2/3 type	-0.8%(y=5.5)	
Max. Image Format		8.8mm x 6.6mm(φ11mm)			1/2 type	-0.39%(y=4.0)	
Transmittance Wavelength Range		400nm - 1700nm		Back Focal Length		17.1mm	
Operation Range	Iris	F1.4 - F16C		Flange Back Length		17.526mm	
	Focus	0.3m - Inf.		Mount		C-Mount	
Control	Iris	Manual		Filter Size		M30.5 P=0.5mm	
	Focus	Manual		Dimensions		φ33.5mm x 38.2mm	
Operating Temperature		-10℃ - +50℃		Weight		87g	
Angle of View	D	IMX990	13.7°	IMX991	6.9°	2/3 type	17.3°
	H	6.40mm x 5.12mm	10.7°	3.20mm x 2.56mm	5.4°		13.9°
	V	(φ8.20mm)	8.6°	(φ4.10mm)	4.3°		10.4 °

Dimensions

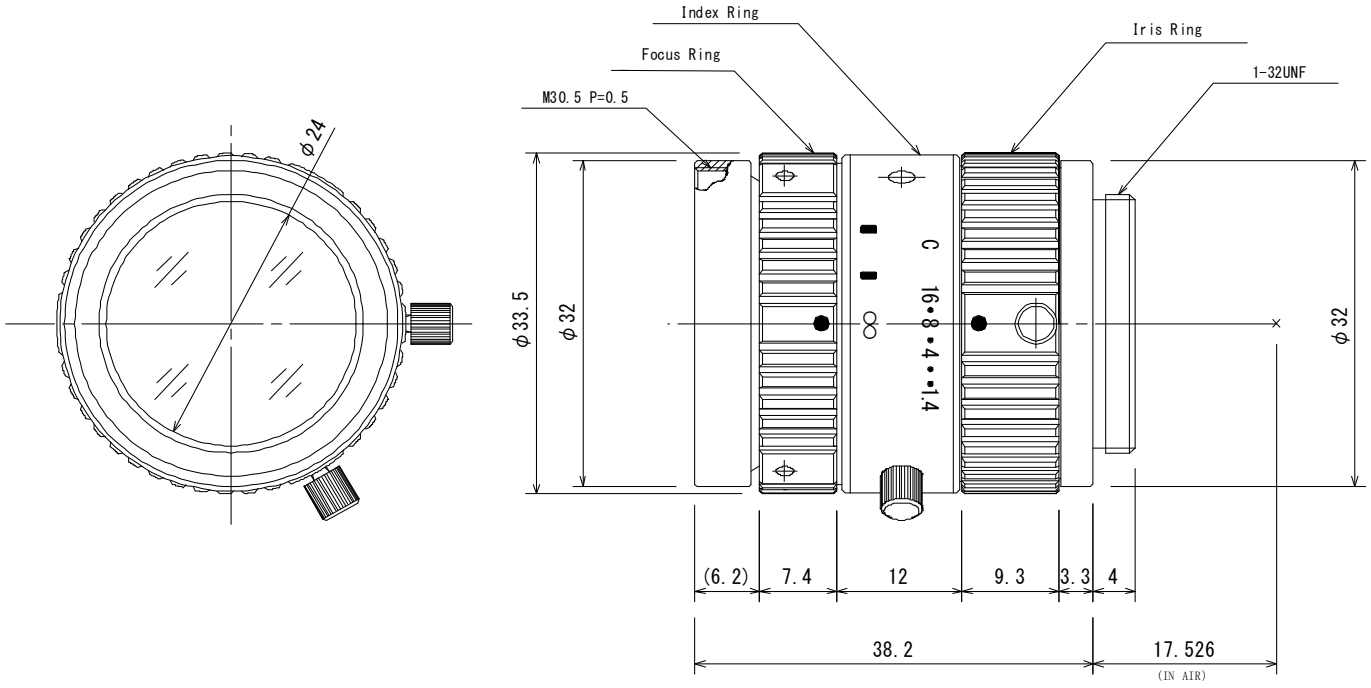

computar

M5018-VSW

f=50mm F1.8 ViSWIR Lite
for Visible+SWIR image sensor, Fixed-focal
C-Mount

Model No.		M5018-VSW		Effective	Front	φ25.5mm	
Focal Length		50mm		Lens Aperture	Rear	φ9.6mm	
Max. Aperture Ratio		1:1.8		Distortion	2/3type	-0.3%(y=5.5)	
Max. Image Format		8.8mm x 6.6mm(φ11mm)			1/2type	-0.2%(y=4.0)	
Transmittance Wavelength Range		400nm – 1700nm		Back Focal Length		13.1mm	
Operation Range	Iris	F1.8- F16C		Flange Back Length		17.526mm	
	Focus	0.5m - Inf.		Mount		C-Mount	
Control	Iris	Manual		Filter Size		M30.5 P=0.5mm	
	Focus	Manual		Dimensions		φ33.5mm x 38.2mm	
Operating Temperature		-10℃ - +50℃		Weight		85g	
Angle of View	D	IMX990	9.8°	IMX991	4.9°	2/3 type	13.1°
	H	6.40mm x 5.12mm	7.6°	3.20mm x 2.56mm	3.8°		10.5°
	V	(φ8.20mm)	6.1°	(φ4.10mm)	3.1°		7.9°

Dimensions

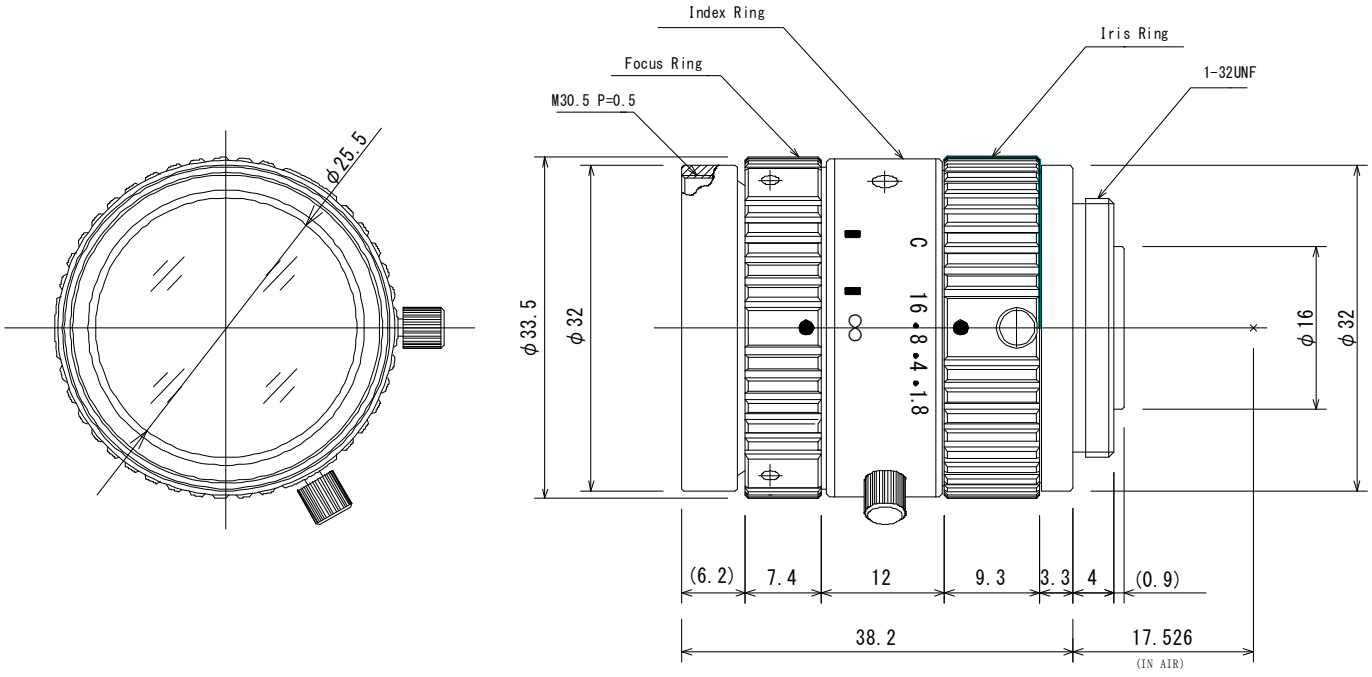

Contact : imageoptics.co.uk

Tel: +44 (0)118 9793727