# Bourdon Tube Pressure Gauges, Stainless Steel
# Type 131.11
# Item no.: 48786129

| Description | |
|---|---|
| Design | EN 837-1 |
| Nominal size | 050 mm |
| Accuracy class | class 2.5 |
| Scale range | 0...2 bar |
| Unit of outer Scale | bar |
| Process connection | 1/4 NPT |
| Connector location | center back mount |
| **Materials** | |
| Material pressure element | Measuring System 316 SS |
| Movement | stainless steel |
| Dial | Aluminum, white |
| Pointer | aluminium, black |
| Case material | Stainless steel 1.4301 |
| Window | polycarbonate |
| Bezel ring | stainless steel, polished |
| **Operating conditions** | |
| Permissible ambient temperature | -40 ... +60 °C |
| | |
| Ingress protection | IP 54 |
| **Options** | |
| Special design features | for oxygen, oil and grease free |
| Bezel ring | stainless steel, polished |

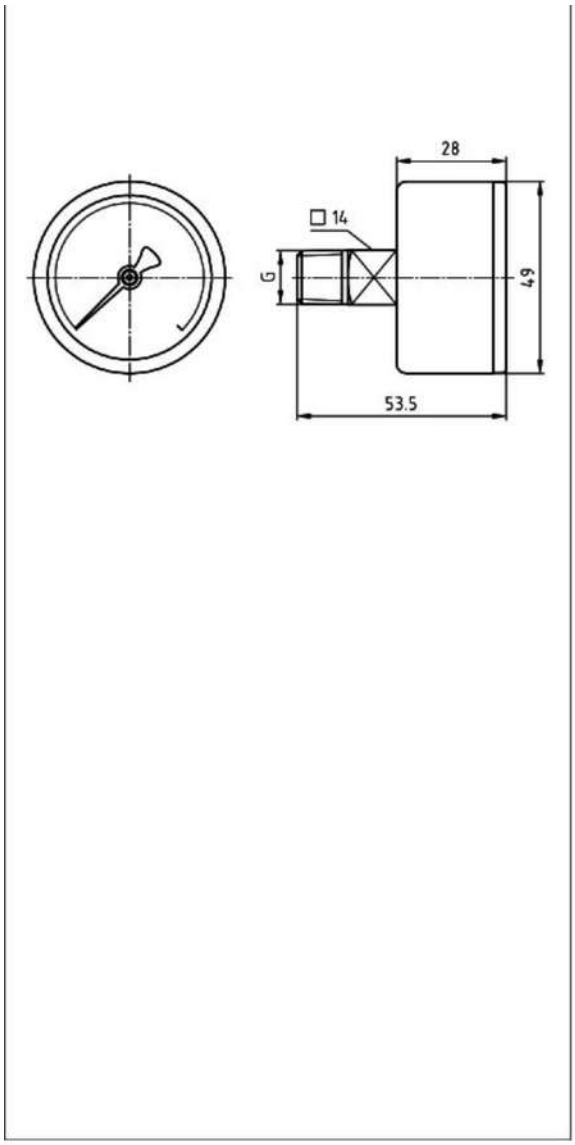




WIKA Instruments – 38 Avenue du Gros Chêne – 95220 HERBLAY
Phone0 820 95 10 10
info_fr@wika.com • http://www.wika.fr