

3091
SELF-SEALING MALE STUD FITTING, BSPT THREAD

Description
Dimensions
Specifications
CAD drawings
Related products

maximum working pressure	**bar** 10	**MPa** 1	**psi** 145
working temperature	**°C (Celsius)** From 0 to 70	**F (Farenheit)** From 32 to 158	**K (Kelvin)** From 273 to 343
vacuum capability	**mm Hg** vacuum level of 755,000		
body	nickel-plated brass		
'O'-rings	nitrile		
gripping ring	stainless steel		

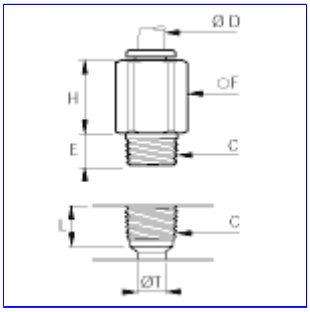

3091

SELF-SEALING MALE STUD FITTING, BSPT THREAD

for metric tubing

Zoom

Description
Dimensions
Specifications
CAD drawings
Related products

Display Part No for imperial tubing

convert weight standard : kg | oz

legris connectic	ØD (mm)	C	E (mm)	F (mm)	H (mm)	L (mm)	ØT (mm)	(kg)
3091 04 10	4	R1/8	7,5	12,0	18,0	9,5	5,0	0,144
3091 06 10	6	R1/8	7,5	13,0	19,5	9,5	7,5	0,015
3091 08 10	8	R1/8	6,5	14,0	25,0	10,5	7,5	0,100
3091 08 13	8	R1/4	11,0	14,0	25,5	13,5	9,0	0,021
3091 10 17	10	R3/8	11,5	17,0	27,5	14,0	10,0	0,035