

ASCO™ Series 256/356 Solenoid Valves

Achieve greater fluid control performance and reliability with a more compact and energy-efficient valve

EMERSON™

You need the freedom to produce more innovative designs, bring products to market faster and reduce the total cost of ownership.

Your customers demand lighter, more compact and energy-efficient machine designs, but without any compromise in performance or reliability. Increasingly, customers are focused on total cost of ownership, requiring greater energy efficiency, product reliability and simplified maintenance procedures. New products need to be brought to market faster, requiring components that are simple to install and with the necessary industry and regional certifications to help streamline the equipment approvals process. It is essential to partner with a fluid control supplier that can provide innovative products, complete solutions and industry application experience to ensure you create winning designs.

"Increasing innovativeness is needed to obtain and retain competitiveness in the modern business climate."
– Cheng, Choi and Yeung, Journal of Engineering and Technology Management



"Fast innovators have long demonstrated that shortening innovation and product development cycles and reducing time to market can be a powerful source of competitive advantage."
– Boston Consulting Group



"Every aspect of machine performance has an impact on profit per hour. Excess energy consumption adds cost, driving profit down."
– McKinsey, Optimizing production in the age of the machine.





Instead of your machines being limited by the performance-to-size ratio of your fluid control, what if you could deliver increased performance, lower energy consumption and greater reliability in a lighter and more compact design?

The ASCO Series 256/356 enables development of more compact machines without compromising fluid control performance.



The ASCO Series 256/356 solenoid valves set new benchmarks in performance-to-size, helping to provide you with greater freedom to develop more creative machine designs. By offering increased pressure ratings and significantly reduced energy consumption, but in a more compact format, you are able to optimize internal fluid control layouts. An array of body materials, including lightweight composites, further enhance your designs, while multiple end connection and electrical options simplify installation and maintenance.
A broad range of industry and geographical certifications help streamline OEM approvals and bring your product to market faster.

Asco™

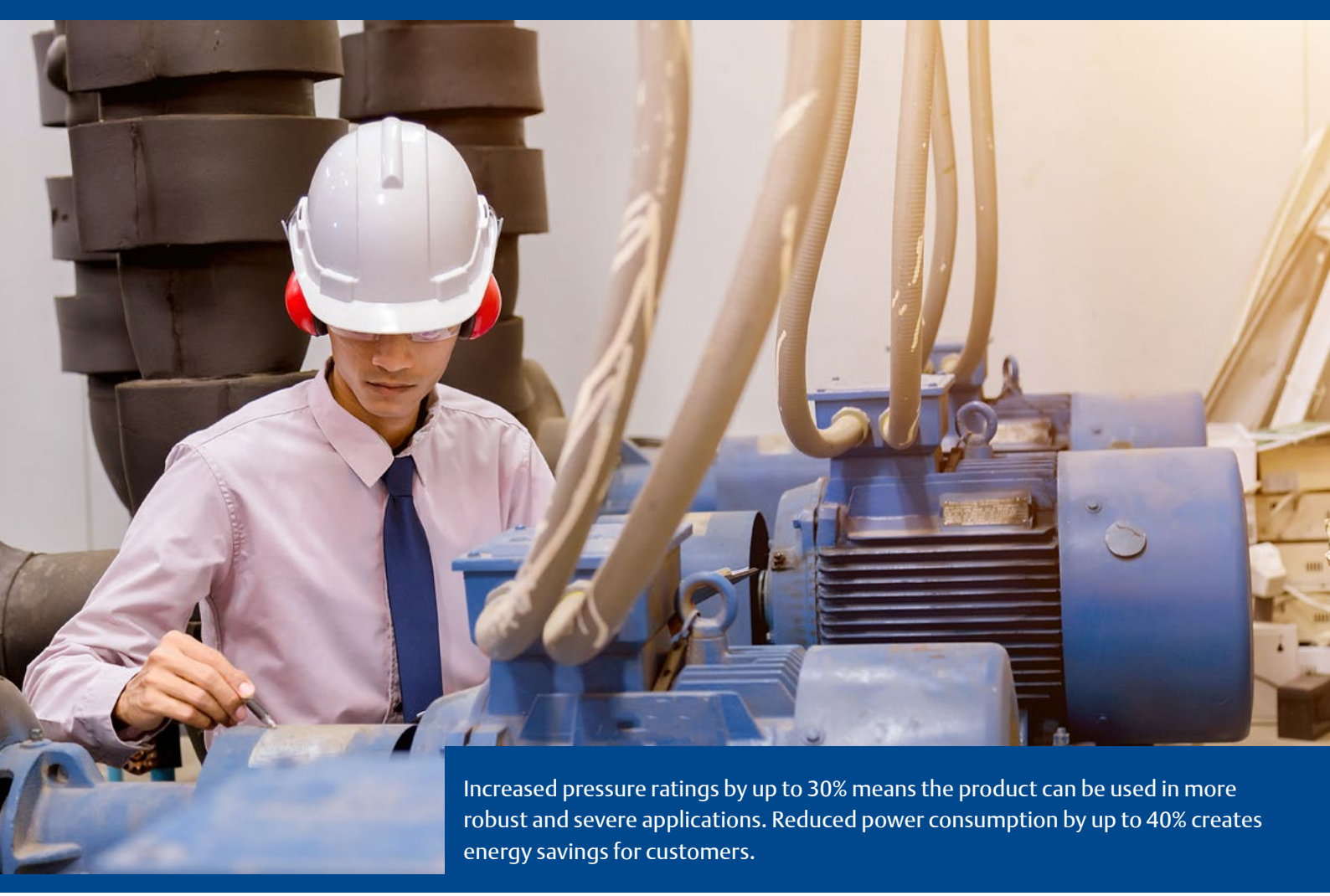

Increased pressure ratings by up to 30% means the product can be used in more robust and severe applications. Reduced power consumption by up to 40% creates energy savings for customers.

Don’t let your fluid control hold back your design freedom.

A fire pump controller manufacturer redesigned its products to comply with new standards. This required an improved test drain solenoid, used to simulate the conditions of an activated sprinkler system. Emerson’s ASCO solenoid valves exceeded the technical specifications and satisfied space constraints, improving performance and also reducing installation time.

Design freedom ▶ p6

Bring your new product to market faster.

A reverse osmosis system manufacturer designed a commercial-sized unit to provide clean drinking water for an office building. Use of Emerson’s ASCO NSF-certified solenoid valves simplified process system certification. Multiple end connector options provided greater design flexibility, and by eliminating the need for a separate plumbing union, this reduced time and labor during assembly.

Faster production ▶ p8

Reduce your total cost of ownership.

A leading food packaging manufacturer had valve reliability issues within its leak-testing analyzers due to a 10-million-cycles-per-month operating rate. They were replaced by Emerson’s ASCO solenoid valves, which yielded more than seven times greater operating life, dramatically reducing downtime, reducing costs and preventing disruption to production schedules.

Cost of ownership ▶ p10

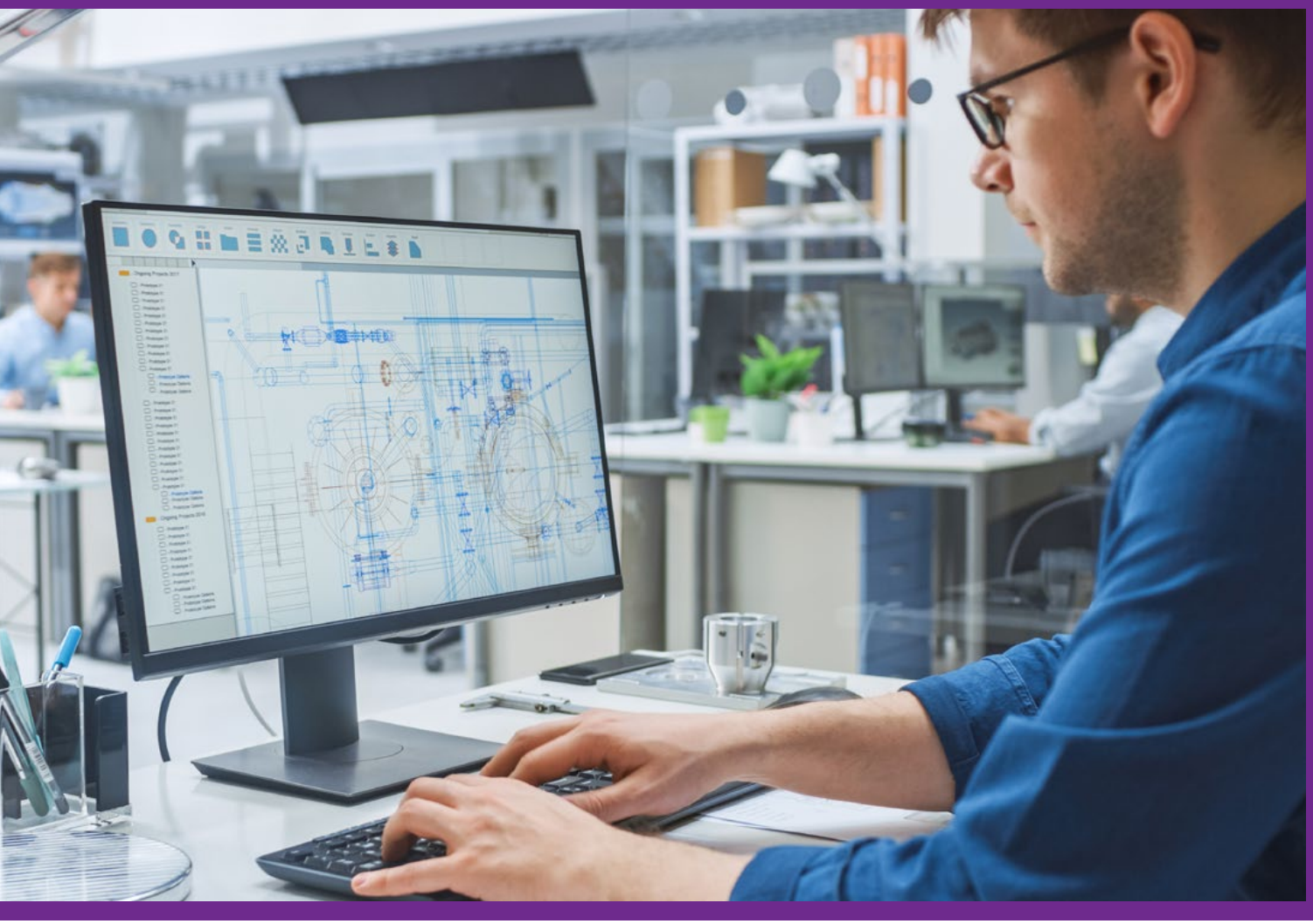

Have greater DESIGN FREEDOM.

Developing machines that meet a customer demand for lighter, more compact, high-performance products requires innovative components that provide greater design freedom. ASCO Series 256/356 two- and three- way solenoid valves set the benchmark for fluid control performance by offering increased pressure ratings from a valve with a smaller overall footprint. This enables more fluid control products to be installed within sleaker and more compact designs. Complementing this is a broad range of construction materials, including composites that significantly reduce overall weight and allow implementation in demanding applications.

What's your challenge?

"Increasing innovativeness is needed to obtain and retain competitiveness in the modern business climate."
– Cheng, Choi and Yeung, Journal of Engineering and Technology Management.

What's your opportunity?

A water filtration equipment manufacturer developed a strainer system with automated flushing capability. Emerson designed a compact fluid automation solution, with differential pressure switch and rugged stainless-steel valve piloted by a solenoid valve packaged in a compact enclosure. This offered direct or remote location mounting, enabling use in remote facilities where maintenance is not readily available.

Build more compact machines



Optimized valve body design and internal flow path reduces the overall valve footprint by 10%. ▶ p13



Ultra-efficient design helps to reduce energy consumption by 40% reducing bulky electrical connection footprint. ▶ p13



Lightweight composite bodies that cope with corrosive liquids also reduce the valve weight by up to 20%.

Meet application requirements



Class-leading pressure ratings enables deployment in most demanding applications. ▶ p11



IP67 rating (dust tight, and submersible in up to 1 meter of water) enables installation in harsher environments.



Class F and H (UL approval pending), coils enable applications with an ambient temperature range of -10°C up to 80° C.

Create more innovative designs



Manual override functionality allows operation when there is no power, simplifying cleaning and providing OEMs with greater design flexibility.



Can control higher pressure liquids or gases, enhancing machine performance without adding size or energy consumption.

To discover how ASCO valves can help you develop more innovative machine designs, visit Emerson.com/ASCO



Develop products FASTER.

To maximize profitability there is a need to bring machines and equipment to market faster and with an optimized manufacturing process. ASCO Series 256/356 helps by allowing OEMs and manufacturers to deploy fewer fluid control components, simplifying and reducing the time to install and subsequently maintain. By offering a broad range of components that reliably meet diverse application demands, Emerson also helps to streamline the procurement process and strengthen the supply chain. A wide range of third-party industry certifications helps to prevent delays in the agency approval process.

What's your challenge?



"Fast innovators have long demonstrated that shortening innovation and product development cycles and reducing time to market can be a powerful source of competitive advantage."
– Boston Consulting Group

What's your opportunity?



An industrial cooking equipment manufacturer improved the design of its food steamer to eliminate reservoir overflows and resulting maintenance costs. Emerson's compact NSF-rated stainless-steel ASCO 256 Series solenoid valve increased reliability and accelerated UL approval.

Speed up manufacturing process



Multiple quick-connect end connector options help to reduce installation and maintenance time for both manufacturers and end users. ▶ p14



Flexible electrical connections reduce installation time by up to 40%. ▶ p15



Enhanced pressure rating/ performance reduces the need for a second valve, minimizing the number of components to be installed. ▶ p11

Simplify procurement and supply line



An extensive range of sizes, materials and configurations from a single supplier helps to simplify procurement.

Reduce equipment certification approval time

EC1935/EC2023

DM 174-2004

Certification/compliance with a broad range of industry standards and third party approvals. ▶ p14

To discover how ASCO valves can help you develop more innovative machine designs, visit Emerson.com/ASCO



Reduce TOTAL COST of OWNERSHIP.

More refined procurement practices places greater emphasis on the total cost of machines and equipment over their complete lifecycle. This requires OEMs and manufacturers to provide solutions that offer a lower total cost of ownership. In addition to offering comparable pressure ratings from a smaller valve, the Series 256/356 also consume less power. This enables OEMs to apply a smaller valve to achieve the same fluid control performance, whilst also making significant energy savings. The Series 256/356 is also extremely reliable and offers an extended life. The capacity to use fewer fluid components helps further increase machine reliability, and reduce maintenance time and costs.

What's your challenge?

"Every aspect of machine performance has an impact on profit per hour. Excess energy consumption adds cost, driving profit down."
– McKinsey, Optimizing production in the age of the machine.

What's your opportunity?

A plumbing equipment manufacturer improved the reliability of its automatic P trap water injection system by using Emerson's ultra-reliable, low-power ASCO Series 256 solenoid valves. This enabled deployment in remotely located (wilderness) restrooms that had no power and were costly to maintain.

Reduce energy consumption

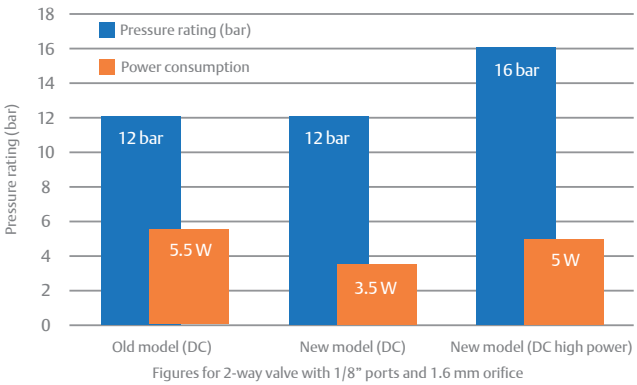

Figures for 2-way valve with 1/8" ports and 1.6 mm orifice

Comparative pressure ratings in a smaller valve typically results in increased power consumption, but the Series 256/356 actually reduces energy use by as much as 40%.



Energy efficient 3 to 9 W, low power consumption.

Reduce capital costs

Model	Pressure ratings (AC)						Pressure ratings (DC)					
	5	10	15	20	25	30	5	10	15	20	25	30
2-way 1/8"		7 - 30 bar (101 - 435 PSI)						3 - 26 bar (43 - 377 PSI)				
2-way 1/4"		5 - 30 bar (72 - 435 PSI)						4 - 30 bar (58- 377 PSI)				
3-way 1/8"		4 - 15 bar (58 - 217 PSI)						4 - 15 bar (58 - 217 PSI)				
3-way 1/4"		3 - 13 bar (43 - 188 PSI)						3 - 13 bar (43 - 188 PSI)				

Figures are for Normally Closed version

Improved DC voltage performance now more aligned with AC voltage performance, eliminating the need and cost to convert to AC power to maximize solenoid valve performance.

Increase reliability and availability

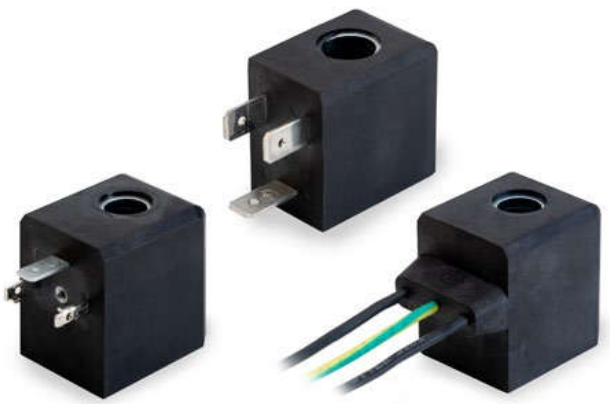

Flexible electrical connections makes maintenance much easier and faster, helping to increase machine availability. ▶ p14



High reliability and long service life helps to lower valve replacement costs and maximizes machine availability.

To discover how ASCO valves can help you develop more innovative machine designs, visit Emerson.com/ASCO

The ASCO Series 256/356: Enhanced fluid control performance that elevates your machine designs.



ASCO Series 256/356 overview

By completely redesigning the ASCO Series 256/356, Emerson has managed to defy conventional wisdom, achieving an improved pressure rating from a smaller solenoid valve, whilst also reducing energy consumption. The availability of composite materials reduces weight, and a manual override option supporting easier maintenance provides designers with much greater flexibility when implementing fluid automation within their machine. Innovative connectors and a broad range of industry approvals that provide suitability to a broad range of demanding applications help increase speed of construction and certification, helping to bring products to market faster. Outstanding reliability, long service life and easy maintenance functions help to minimize maintenance and replacement costs, lowering total costs of ownership.
www.Emerson.com/ASCO





Compact design



- Small overall dimension of 20 x 54 x 33 mm for 1/8" version and 30 x 70 x 43 mm for 1/4" version



- Lightweight composite bodies help designers to reduce the overall weight of machines

Enhanced performance



- Excellent flow rate – Kv up to 7.9 l/min (with the Ø 5 mm orifice) through optimization of the valve stroke
- Core design adapted for fluid flow in 3-way version

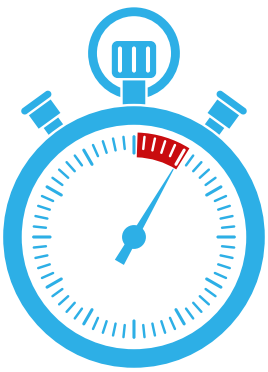

- Fast response time and very reactive
- 10 ms to open and 20 ms to close for 2-way version
- 10 ms to open and 30 ms to close for 3-way models

Greater reliability



- Improved IP rating – IP 67 protection. Enclosure protection IP65 (zone 22), m (zones 2, 1, 21)
- Suitable for outdoor all-weather use
- Unaffected by hard water

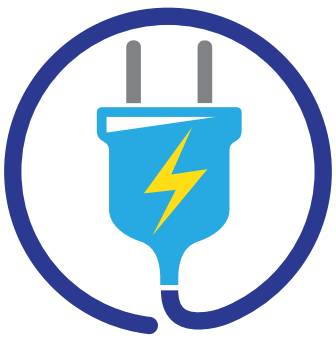

- Class F/H coils. International approvals dual frequency coil 50/60 Hz

The ASCO Series 256/356: Enhanced fluid control performance that elevates your machine designs.

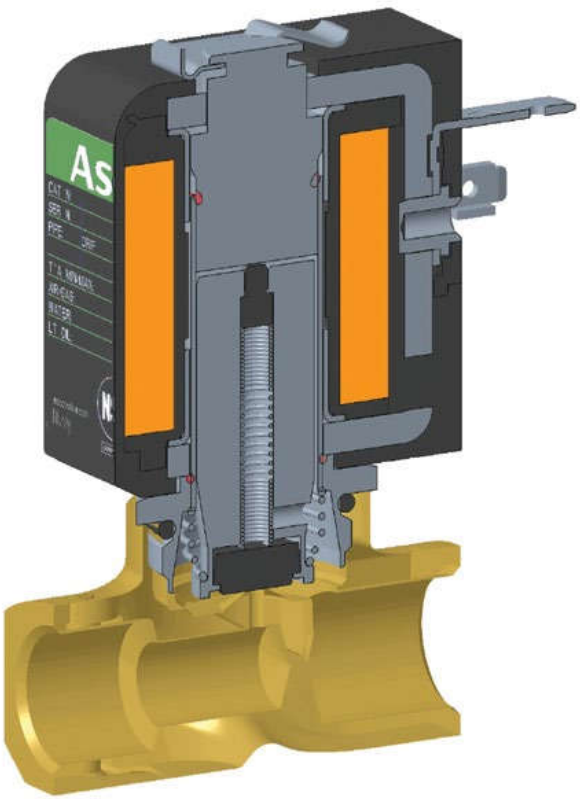

Materials

- Brass OT 57 (CW510L) Pb <0.2%
- Lead leaching process of the surface on request, Pb ~ 0%
- AISI 316 stainless-steel
- Composite (PPS)
- FPM seals and disc

Industry approvals

- UL (Class F)
- CE 1935/2004
- MD 174/2004
- NSF 169 certified
- IEC 60335

Connections

- Connections 1/8" and 1/4": Gas ISO 228/1
- Electrical connections: DIN connection, DIN connection with cable, or flying leads
- Two 1/8" M3 mounting holes, 1/4" M4 mounting holes in the body and manual screwdriver operation as standard



Industrial and commercial applications

- **Pumps and compressors** – Professional air compressors, pumps
- **Heat transfer and domestic heating** – Commercial heat pumps, industrial heat exchange, HVAC System for public buildings
- **Food and beverage equipment** – Professional coffee makers, beverage dispensing (soft drinks, water, wine), ovens (food service equipment industry)
- **Machinery** – Conveyors, professional welding equipment, plastic molding, temperature control unit

Easier maintenance



- Cleaning performed simply by unscrewing the tube cylinder



- Interchangeable coils AC and DC on most designs
- Removable/rotatable coil while valve is under pressure



- Manual override provides more flexible maintenance and operational options
- Compact design for powerful fluid control in small spaces

Faster installation



- Composite valve quick connect end connector (push-In, nut for tube, barbed)



- Quick and easy coil assembly and disassembly by means of a clip

Broader compatibility

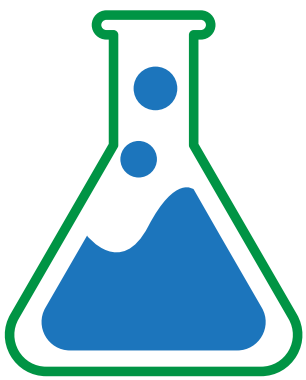

- Broad chemical compatibility with operating fluids and the environment

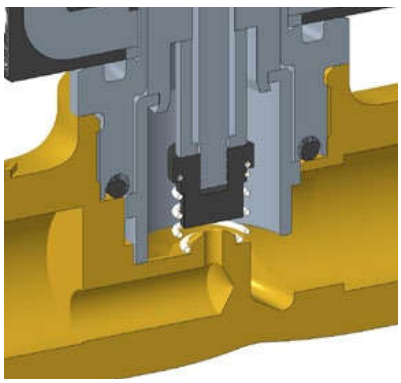

- Disc and valve seal options including RUBY, FPM – offering excellent resistance to oil, acid and temperature extremes

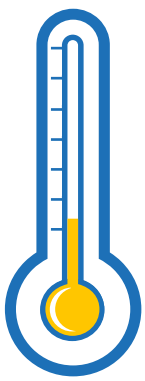

- Ambient temperature -10°C to +60°C
- Fluid temperature -10°C to +170°C

Gain the freedom to produce more innovative designs, bring products to market faster and reduce the total cost of ownership.



ASCO™

Reliable, compact and energy-efficient valves for enhanced fluid control performance.

Visit us: **Emerson.com/ASCO**
Your local contact: **Emerson.com/contactus**

Emerson.com/ASCO
Facebook.com/EmersonAutomationSolutions
LinkedIn.com/company/Emerson-Automation-Solutions
Twitter.com/EMR_Automation

The Emerson logo is a trademark and service mark of Emerson Electric Co. Brand logotype are registered trademarks of one of the Emerson family of companies. All other marks are the property of their respective owners. © 2021 Emerson Electric Co. All rights reserved. BR000255ENUS-01_03-21

EMERSON™

CONSIDER IT SOLVED™