# PT760E

## Pressure transmitter

PT-600-SEG14-A-ZVG/DE

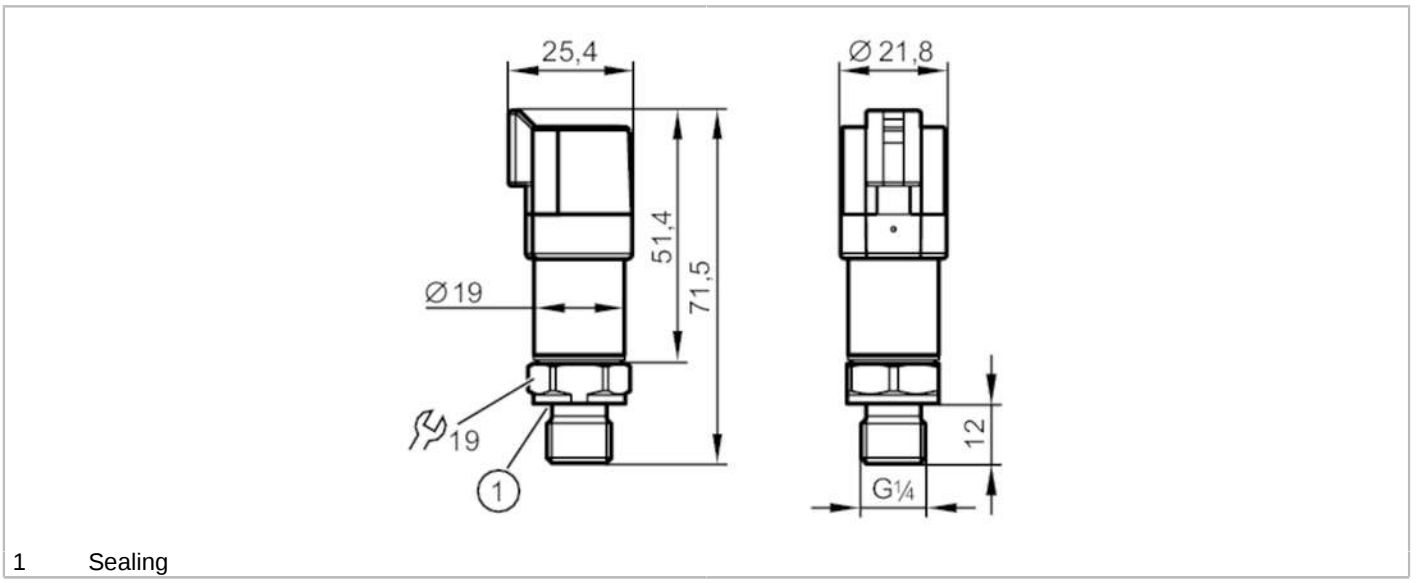


1 Sealing

| | | | | |
|---|---|---|---|---|
| **Product characteristics** | | | | |
| Number of inputs and outputs | | Number of analogue outputs: 1 | | |
| Measuring range | | 0...600 bar | 0...8700 psi | 0...60 MPa |
| Process connection | | threaded connection G 1/4 external thread (DIN EN ISO 1179-2) | | |
| **Application** | | | | |
| Application | | for mobile applications | | |
| Media | | liquids and gases | | |
| Medium temperature | [°C] | -40...125 | | |
| Min. bursting pressure | | 2500 bar | 36255 psi | 250 MPa |
| Pressure rating | | 1500 bar | 21755 psi | 150 MPa |
| Note on pressure rating | | static | | |
| Vacuum resistance | | -1000 mbar | -0.1 MPa | |
| Type of pressure | | relative pressure | | |
| **Electrical data** | | | | |
| Operating voltage | [V] | 8...32 DC | | |
| Min. insulation resistance | [MΩ] | 100; (500 V DC) | | |
| Protection class | | III | | |
| Reverse polarity protection | | yes | | |
| Power-on delay time | [s] | < 0.1 | | |
| **Inputs / outputs** | | | | |
| Number of inputs and outputs | | Number of analogue outputs: 1 | | |
| **Outputs** | | | | |
| Total number of outputs | | 1 | | |
| Output signal | | analogue signal | | |
| Number of analogue outputs | | 1 | | |
| Analogue current output | [mA] | 4...20 | | |
| Max. load | [Ω] | (Ub - 8 V) / 21,5 mA; @8V = 0 Ω; @12V max. 200 Ω; @24V max. 750 Ω | | |
| Short-circuit proof | | yes | | |

# PT760E

## Pressure transmitter

PT-600-SEG14-A-ZVG/DE

| | | | |
|---|---|---|---|
| Overload protection | yes | | |
| **Measuring/setting range** | | | |
| Measuring range | 0...600 bar | 0...8700 psi | 0...60 MPa |
| **Accuracy / deviations** | | | |
| Repeatability [% of the span] | < ± 0,05; (with temperature fluctuations < 10 K) | | |
| Characteristics deviation [% of the span] | < ± 0,8; (incl. drift when overtightened, zero point and span error, non-linearity, hysteresis) | | |
| Linearity deviation [% of the span] | < ± 0,25 (BFSL) / < ± 0,5 (LS) | | |
| Hysteresis deviation [% of the span] | < ± 0,2 | | |
| Long-term stability [% of the span] | < ± 0,1; (per 6 months) | | |
| Temperature coefficient zero point [% of the span / 10 K] | < ± 0,1 (0...80 °C); < ± 0,2 (-40...0 °C / 80...125 °C) | | |
| Temperature coefficient span [% of the span / 10 K] | < ± 0,1 (0...80 °C); < ± 0,2 (-40...0 °C / 80...125 °C) | | |
| **Response times** | | | |
| Step response time analogue output [ms] | 2 | | |
| **Operating conditions** | | | |
| Ambient temperature [°C] | -40...100 | | |
| Storage temperature [°C] | -40...100 | | |
| Protection | IP 67; IP 69K | | |
| **Tests / approvals** | | | |
| EMC | noise immunity according to UN ECE R10, rev. 6 | | |
| | ISO 11452-2 | 100 V/m | |
| | DIN EN 61326-1 | | |
| Shock resistance | DIN EN 60068-2-27 | 500 g (1 ms) | |
| Vibration resistance | DIN EN 60068-2-6 | 20 g (10...2000 Hz) | |
| MTTF [years] | 711 | | |
| Pressure Equipment Directive | Modul A; can be used for group 2 fluids; group 1 fluids on request | | |
| **Mechanical data** | | | |
| Weight [g] | 62.8 | | |
| Housing | cylindrical | | |
| Dimensions [mm] | Ø 19 / L = 71.5 | | |
| Materials | stainless steel (630/1.4542/17-4 PH); stainless steel (316L/1.4404); PPS | | |
| Materials (wetted parts) | stainless steel (630/1.4542/17-4 PH) | | |
| Min. pressure cycles | 60 million; (at 1.2 times nominal pressure) | | |
| Tightening torque [Nm] | 30...50; (recommended tightening torque; depends on lubrication, seal and pressure rating) | | |
| Process connection | threaded connection G 1/4 external thread (DIN EN ISO 1179-2) | | |
| Process connection sealing | HNBR (DIN EN ISO 1179-2) | | |
| Restrictor element integrated | yes | | |

# PT760E

## Pressure transmitter

PT-600-SEG14-A-ZVG/DE

### Remarks

| | |
|---|---|
| Remarks | BFSL = Best Fit Straight Line |
| | LS = limit value setting |
| Pack quantity | 1 pcs. |

### Electrical connection

Connector: 1 x DEUTSCH connector (DT04-3P)

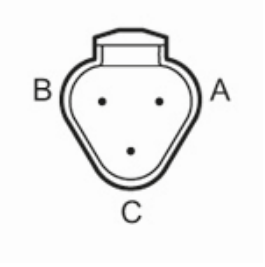


#### Connection

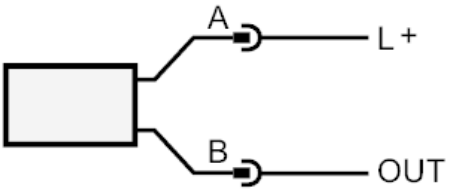


OUT analogue output

### Diagrams and graphs

characteristic load curve of current output

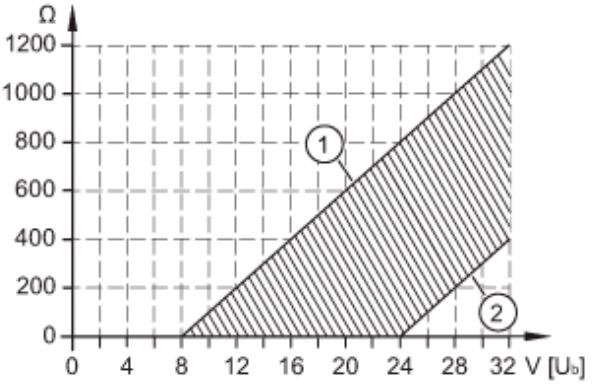


1: Max. load

2: min. load