TI00142R/09/EN/07.22-00
71584473
2022-08-31

Technical Information
RIA46

Field meter



Digital field meter with control unit for monitoring and visualizing analog measured values

Application

- Process recording and supervision
- Process control
- Signal adjustment and signal conversion
- Optional Ex approval
- WHG compliant limit signal transmitter

Your benefits

- 5-digit, 7-segment backlit LC display
- User-configurable dot matrix display range for bar graph, units and tag name
- 1 or 2 universal inputs
- 2 relays (optional)
- Min./max. value saved
- 1 or 2 calculated values
- One linearization table with 32 points for each calculated value
- 1 or 2 analog outputs
- Digital status output (open collector)
- Operation using 3 keys
- Configuration via interface and FieldCare software
- SIL2 approval (optional)

Endress+Hauser
People for Process Automation

Function and system design

Application

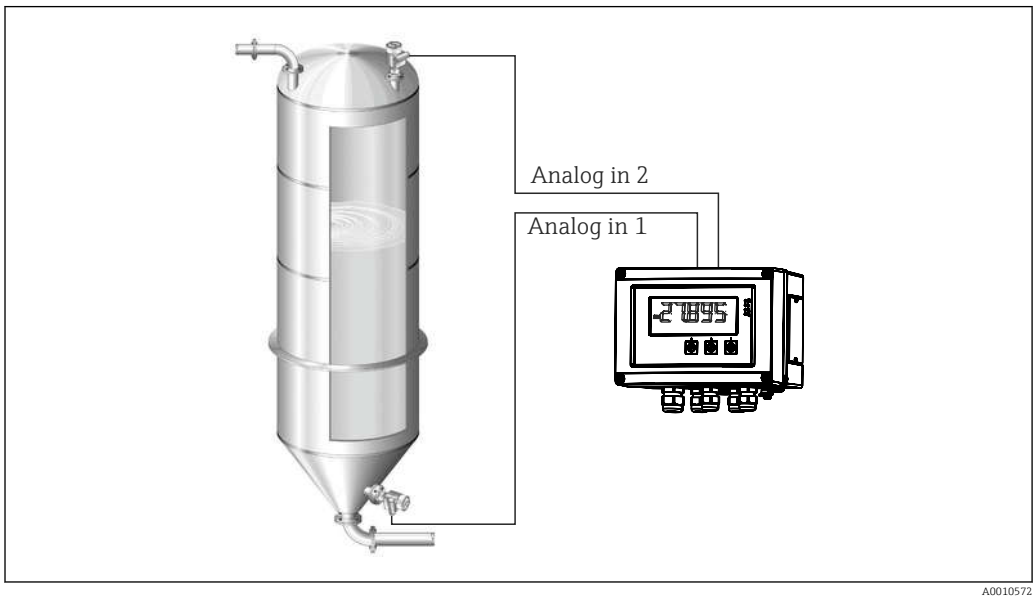

1 Example for "differential pressure" application

The RIA46 field meter supplies transmitters and processes analog signals from transmitters, primarily from process instrumentation. These signals are monitored, evaluated, calculated, saved, separated, linked, converted and displayed. The signals, intermediate values and the results of calculations and analysis are transmitted by digital or analog means.

Measuring system

The RIA46 is a process transmitter, which is controlled by a microcontroller, and exhibits a display, analog inputs for process and status signals, analog and digital outputs, as well as an interface for configuration.

Connected sensors (e.g. temperature, pressure) can be powered by the integrated transmitter power supply system. The signals to be measured are converted from analog to digital signals, processed digitally in the device, and then converted from digital to analog signals and made available to the various outputs. All measured values, and values calculated in any way, are available as a signal source for the display, all outputs, relays and the interface. It is possible to make multiple use of the signals and results (e.g. a signal source as an analog output signal and limit value for a relay).

Mathematics functions

The following mathematics functions are available in RIA46:
- Sum
- Difference
- Multiplication
- Mean
- Linearization

Linearization function

Up to 32 user-definable points are available in the device per calculated value to linearize the input, e.g. for tank linearization. In the case of the two-channel device (option), mathematics channel M2 can be used to linearize mathematics channel M1.

Linearization is also available in the FieldCare configuration software.

Input

Measured variable

Current, voltage, resistance, resistance thermometer, thermocouples

Measuring ranges

Current:
- 0/4 to 20 mA +10% overrange
- Short-circuit current: max. 150 mA
- Load: 10 Ω

Voltage:
- 0 to 10 V, 2 to 10 V, 0 to 5 V, 0 to 1 V, 1 to 5 V, ±1 V, ±10 V, ±30 V, ±100 mV
- Max. permitted input voltage:
  Voltage ≥ 1 V: ±35 V
  Voltage < 1 V: ±12 V
- Input impedance: > 1 000 kΩ

Resistance:
30 to 3 000 Ω

Resistance thermometer:
- Pt100 as per IEC60751, GOST, JIS1604
- Pt500 and Pt1000 as per IEC60751
- Cu100, Cu50, Pt50, Pt46, Cu53 as per GOST
- Ni100, Ni1000 as per DIN 43760

Thermocouple types:
- Typ J, K, T, N, B, S, R as per IEC60584
- Typ U as per DIN 43710
- Typ L as per DIN 43710, GOST
- Typ C, D as per ASTM E998

Number of inputs

One or two universal inputs

Update time

200 ms

Galvanic isolation

Towards all other circuits

Output

Output signal

One or two analog outputs, galvanically isolated

Current/voltage output

Current output:
- 0/4 to 20 mA
- Overrange up to 22 mA

Voltage:
- 0 to 10 V, 2 to 10 V, 0 to 5 V, 1 to 5 V
- Overrange: up to 11 V, short-circuit proof, I_{max} < 25 mA

HART®

HART® signals are not affected

Loop power supply

- Open-circuit voltage: 24 V_{DC} (+15% /-5%)
- Hazardous area version: > 14 V at 22 mA
- Non-hazardous area version: > 16 V at 22 mA
- Maximum 30 mA short-circuit-proof and overload-resistant
- Galvanically isolated from system and outputs

Switching output

Open collector for monitoring the device state as well as open circuit and alarm notification. The OC output is closed in the fault-free operating state. In error state, the OC output is opened.

- I_{max} = 200 mA
- U_{max} = 28 V
- $U_{on/max}$ = 2 V at 200 mA

Galvanic isolation to all circuits, test voltage 500 V

Relay output

Relay output for limit monitoring

Relay contact	Changeover
Maximum contact load DC	30 V / 3 A (permanent state, without destruction of the input)
Maximum contact load AC	250 V / 3 A (permanent state, without destruction of the input)
Minimum contact load	500 mW (12 V/10 mA)
Galv. isolation towards all other circuits	Test voltage 1 500 V_{AC}
Switching cycles	> 1 million

Power supply

Terminal assignment

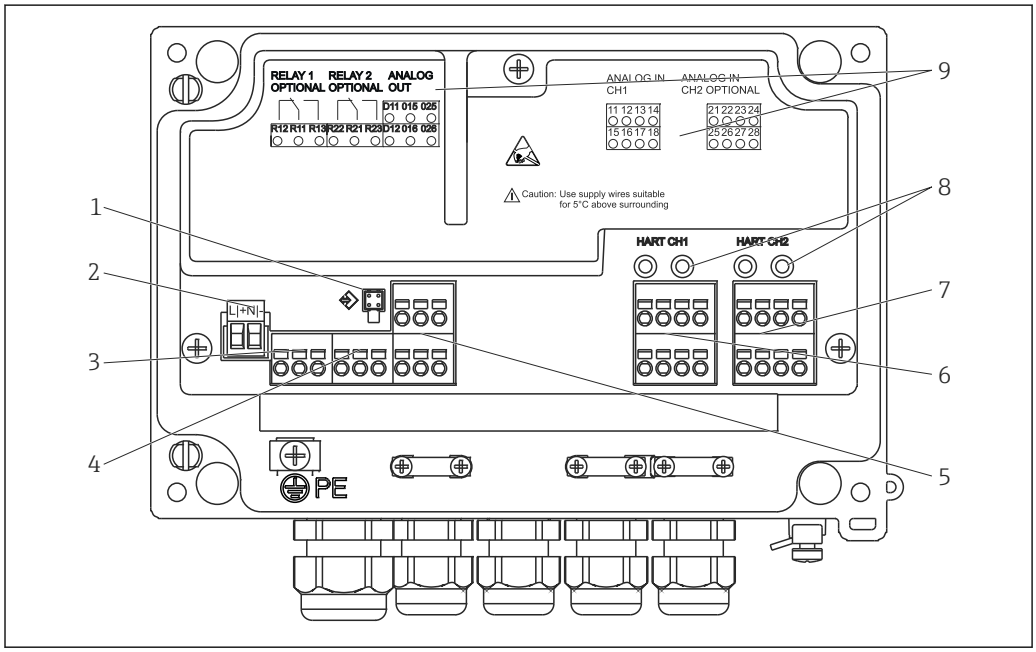

A0010685

2 *Interior view and terminal assignment of the process indicator*

1 *Connection socket for interface cable*
2 *Terminal for supply voltage*
3 *Terminal for relay 1 (optional)*
4 *Terminal for relay 2 (optional)*
5 *Terminal for analog and status output*
6 *Terminal for analog input 1*
7 *Terminal for analog input 2 (optional)*
8 *HART® connection sockets*
9 *Laser labeling of terminal assignment*

Supply voltage

Wide range power supply 24 to 230 V AC/DC (-20 % / +10 %) 50/60 Hz

Power consumption

Max. 21.5 VA / 6.9 W

Interface connection data

Commubox FXA291 PC USB interface

- Connection: 4-pin socket
- Transmission protocol: FieldCare
- Transmission rate: 38,400 baud

Interface cable TXU10-AC PC USB interface

- Connection: 4-pin socket
- Transmission protocol: FieldCare
- Order configuration: interface cable with FieldCare Device Setup DVD incl. all Comm DTMs and Device DTMs

Performance characteristics

Reference operating conditions

Power supply: 230 V_{AC}, 50/60 Hz

Ambient temperature: 25 °C (77 °F) ± 5 °C (9 °F)

Humidity: 20 %...60 % rel. humidity

Maximum measured error

Universal input:

Accuracy	Input:	Range:	Maximum measured error of measuring range (oMR):
	Current	0 to 20 mA, 0 to 5 mA, 4 to 20 mA; Overrange: up to 22 mA	±0.05%
	Voltage ≥ 1 V	0 to 10 V, 2 to 10 V, 0 to 5 V, 1 to 5 V, 0 to 1 V, ±1 V, ±10 V, ±30 V	±0.1%
	Voltage < 1 V	±100 mV	±0.05%
	Resistance measurement	30 to 3 000 Ω	4-wire: ± (0.10% oMR + 0.8 Ω) 3-wire: ± (0.10% oMR + 1.6 Ω) 2-wire: ± (0.10% oMR + 3 Ω)
	RTD	Pt100, −200 to 850 °C (−328 to 1 562 °F) (IEC60751, α=0.00385) Pt100, −200 to 850 °C (−328 to 1 562 °F) (JIS1604, w=1.391) Pt100, −200 to 649 °C (−328 to 1 200 °F) (GOST, α=0.003916) Pt500, −200 to 850 °C (−328 to 1 562 °F) (IEC60751, α=0.00385) Pt1000, −200 to 600 °C (−328 to 1 112 °F) (IEC60751, α=0.00385)	4-wire: ± (0.10% oMR + 0.3 K (0.54 °F)) 3-wire: ± (0.10% oMR + 0.8 K (1.44 °F)) 2-wire: ± (0.10% oMR + 1.5 K (2.7 °F))
		Cu100, −200 to 200 °C (−328 to 392 °F) (GOST, w=1.428) Cu50, −200 to 200 °C (−328 to 392 °F) (GOST, w=1.428) Pt50, −200 to 1 100 °C (−328 to 2 012 °F) (GOST, w=1.391) Pt46, −200 to 850 °C (−328 to 1 562 °F) (GOST, w=1.391) Ni100, −60 to 250 °C (−76 to 482 °F) (DIN43760, α=0.00617) Ni1000, −60 to 250 °C (−76 to 482 °F) (DIN43760, α=0.00617)	4-wire: ± (0.10% oMR + 0.3 K (0.54 °F)) 3-wire: ± (0.10% oMR + 0.8 K (1.44 °F)) 2-wire: ± (0.10% oMR + 1.5 K (2.7 °F))
		Cu53, −50 to 200 °C (−58 to 392 °F) (GOST, w=1.426)	4-wire: ± (0.10% oMR + 0.3 K (0.54 °F)) 3-wire: ± (0.10% oMR + 0.8 K (1.44 °F)) 2-wire: ± (0.10% oMR + 1.5 K (2.7 °F))
	Thermocouples	Typ J (Fe-CuNi), −210 to 1 200 °C (−346 to 2 192 °F) (IEC60584)	± (0.10% oMR +0.5 K (0.9 °F)) from −100 °C (−148 °F)

Accuracy	Input:	Range:	Maximum measured error of measuring range (oMR):
		Typ K (NiCr-Ni), −200 to 1 372 °C (−328 to 2 502 °F) (IEC60584)	± (0.10% oMR +0.5 K (0.9 °F)) from −130 °C (−202 °F)
		Typ T (Cu-CuNi), −270 to 400 °C (−454 to 752 °F) (IEC60584)	± (0.10% oMR +0.5 K (0.9 °F)) from −200 °C (−328 °F)
		Typ N (NiCrSi-NiSi), −270 to 1 300 °C (−454 to 2 372 °F) (IEC60584)	± (0.10% oMR +0.5 K (0.9 °F)) from −100 °C (−148 °F)
		Typ L (Fe-CuNi), −200 to 900 °C (−328 to 1 652 °F) (DIN43710, GOST)	± (0.10% oMR +0.5 K (0.9 °F)) from −100 °C (−148 °F)
		Typ D (W3Re/W25Re), 0 to 2 495 °C (32 to 4 523 °F)(ASTME998)	± (0.15% oMR +1.5 K (2.7 °F)) from 500 °C (932 °F)
		Typ C (W5Re/W26Re), 0 to 2 320 °C (32 to 4 208 °F) (ASTME998)	± (0.15% oMR +1.5 K (2.7 °F)) from 500 °C (932 °F)
		Typ B (Pt30Rh-Pt6Rh), 0 to 1 820 °C (32 to 3 308 °F) (IEC60584)	± (0.15% oMR +1.5 K (2.7 °F)) from 600 °C (1 112 °F)
		Typ S (Pt10Rh-Pt), −50 to 1 768 °C (−58 to 3 214 °F) (IEC60584)	± (0.15% oMR +3.5 K (6.3 °F)) for −50 to 100 °C (−58 to 212 °F) ± (0.15% oMR +1.5 K (2.7 °F)) from 100 °C (212 °F)
		Typ U (Cu-CuNi), −200 to 600 °C (−328 to 1 112 °F) (DIN 43710)	± (0.15% oMR +1.5 K (2.7 °F)) from 100 °C (212 °F)
AD converter resolution		16 bit	
Temperature drift		Temperature drift: ≤ 0.01%/K (0.1%/18 °F) oMR ≤ 0.02%/ K (0.2%/18 °F) oMR for Cu100, Cu50, Cu53, Pt50 and Pt46	

Analog output:

Current	0/4 to 20 mA, overrange up to 22 mA	±0.05% of measuring range
	Max. load	500 Ω
	Max. inductivity	10 mH
	Max. capacity	10 µF
	Max. ripple	10 mVpp at 500 Ω, frequency < 50 kHz
Voltage	0 to 10 V, 2 to 10 V 0 to 5 V, 1 to 5 V Overrange: up to 11 V, shortcircuit proof, I_{max} < 25 mA	±0.05% of measuring range ±0.1 % of measuring range
	Max. ripple	10 mVpp at 1 000 Ω, frequency < 50 kHz
Resolution	13 bit	
Temperature drift	≤ 0.01%/K (0.1%/18 °F) of measuring range	
Galvanic isolation	Testing voltage of 500 V towards all other circuits	

Installation

Mounting location

Field, direct wall mounting and wall or pipe mounting [1] using the optional mounting plate.

Orientation

No restrictions.

The orientation is determined by the readability of the display.

1) According to UL approval panel or surface mounting only.

Max. viewing angle range +/- 45° from the central display axis in every direction.

Environment

Ambient temperature range

NOTICE

The life-time of the display is shortened when operated in the upper temperature range.

- To avoid heat accumulation, always make sure the device is sufficiently cooled.

Non-Ex/Ex devices: –40 to 60 °C (–40 to 140 °F)

UL devices: –40 to 50 °C (–40 to 122 °F)

At temperatures below –30 °C (–22 °F) the readability of the display can no longer be guaranteed.

Storage temperature

–40 to 85 °C (–40 to 185 °F)

Altitude

< 2 000 m (6 560 ft) above MSL

Climate class

As per IEC 60654-1, Class B2

Degree of protection

IP 67 / NEMA 4x (not evaluated by UL)

Impact resistance

3g at 2-150 Hz as per IEC 60068-2-6

Electrical safety

Protection class I, overvoltage protection category II, pollution degree 2 for aluminum housing

Protection class II, overvoltage protection category II, pollution degree 2 for plastic housing

Condensation

Permitted

Electromagnetic compatibility (EMC)

CE compliance

Electromagnetic compatibility in accordance with all the relevant requirements of the IEC/EN 61326 series and NAMUR Recommendation EMC (NE21). For details refer to the EU Declaration of Conformity.

- Maximum measured error < 1% of measuring range
- Interference immunity as per IEC/EN 61326 series, industrial requirements
- Interference emission as per IEC/EN 61326 series (CISPR 11) Group 1 Class A

This unit is not intended for use in residential environments and cannot guarantee adequate protection of the radio reception in such environments.

Mechanical construction

Design, dimensions

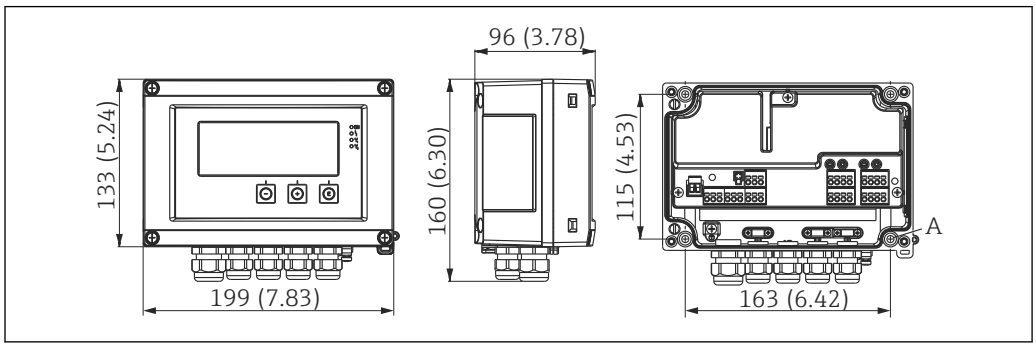

3 Dimensions of the field meter in mm (in)

A Drill-hole for direct wall mounting or on optional mounting plate with 4 screws Φ5 mm (2 in)

Weight

- Plastic housing: approx. 600 g (1.32 lb)
- Aluminum housing: approx. 1700 g (3.75 lb)

Material

Housing	Nameplate
Fiber-glass reinforced plastic PBT-GF30	Laser marking
Optional: Aluminum (AlSi12, AC-44100 or AlSi10Mg(Fe), AC-43400)	Laser-writable foil, polyester

Terminals

Spring terminals, 2.5 mm^2 (14 AWG); auxiliary voltage with plug-in screw terminals 0.1 to 4 mm^2 (30 to 12 AWG), torque 0.5 to 0.6 Nm (0.37 to 0.44 lbf ft).

Operability

Local operation

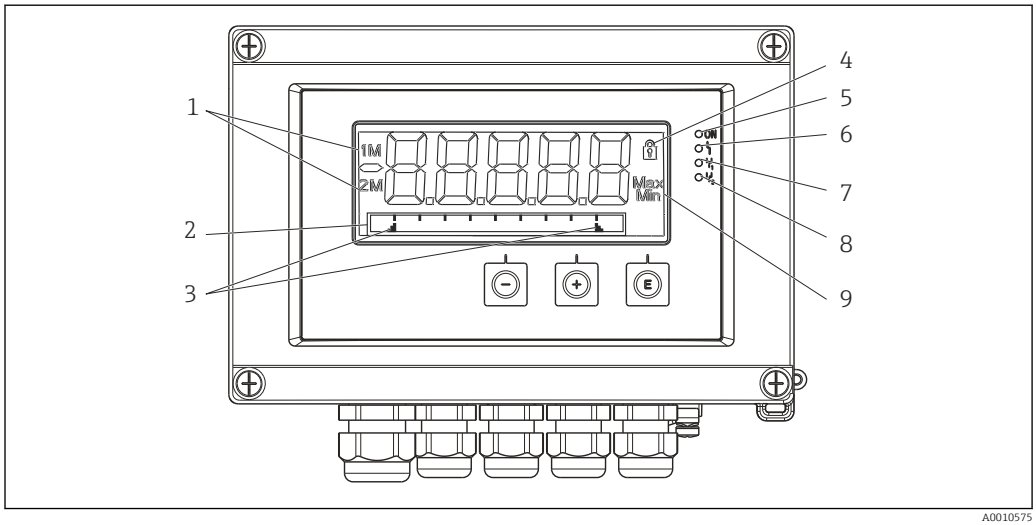

4 Display of the field meter

1 Channel display: 1: analog input 1; 2: analog input 2; 1M: calculated value 1; 2M: calculated value 2
2 Dot matrix display for TAG, bar graph and unit
3 Limit value indicators in the bar graph
4 "Operation locked" indicator
5 Green LED; measuring device operational
6 Red LED; error/alarm
7 Yellow LED; status of relay 1
8 Yellow LED; status of relay 2
9 Minimum/maximum value indicator

- Display
  5-digit, 7-segment backlit LC display
  Dot matrix for text/bar graph
- Display range
  -99999 to +99999 for measured values
- Signaling
  - Setup security locking (lock)
  - Measuring range overshoot/undershoot
  - 2 x status relay (only if relay option was selected)

Operating elements

3 keys: -, +, E

Remote operation

Configuration

The device can be configured with the PC software or on site using the operating keys. FieldCare Device Setup is delivered together with the Commubox FXA291 or TXU10-AC (see 'Accessories') or can be downloaded free of charge from www.endress.com.

Interface

4-pin socket for the connection with a PC via Commubox FXA291 or TXU10-AC interface cable (see 'Accessories')

Certificates and approvals

Current certificates and approvals that are available for the product can be selected via the Product Configurator at www.endress.com:

1. Select the product using the filters and search field.
2. Open the product page.
3. Select **Configuration**.

Other standards and guidelines

- IEC 60529:
  Degrees of protection provided by enclosures (IP code)
- IEC 61010-1:
  Safety requirements for electrical equipment for measurement, control and laboratory use
- EN 60079-11:
  Explosive atmospheres - Part 11: Equipment protection by intrinsic safety "I" (optional)

Ordering information

Detailed ordering information is available from your nearest sales organization www.addresses.endress.com or in the Product Configurator at www.endress.com:

1. Select the product using the filters and search field.
2. Open the product page.
3. Select **Configuration**.

Product Configurator - the tool for individual product configuration

- Up-to-the-minute configuration data
- Depending on the device: Direct input of measuring point-specific information such as measuring range or operating language
- Automatic verification of exclusion criteria
- Automatic creation of the order code and its breakdown in PDF or Excel output format
- Ability to order directly in the Endress+Hauser Online Shop

Accessories

Various accessories are available for the device, and can be ordered with the device or at a later stage from Endress+Hauser. Detailed information on the specific order code is available from your local Endress+Hauser sales organization or on the product page of the Endress+Hauser website: www.endress.com.

Device-specific accessories

Cable glands and adapters

Adapter set, NPT

1x M20x1.5 (male) - NPT1/2" (female) 4x M16x1.5 (male) - NPT1/2" (female)	RIA46X-GI

Plastic coupling set

4x M16x1.5 + 1x M20x1.5	RIA46X-GH

Housing

Weather protection cover

Order:
- As an additional option in the product structure of the RIA46
- Separately via the order code: RK01-AR

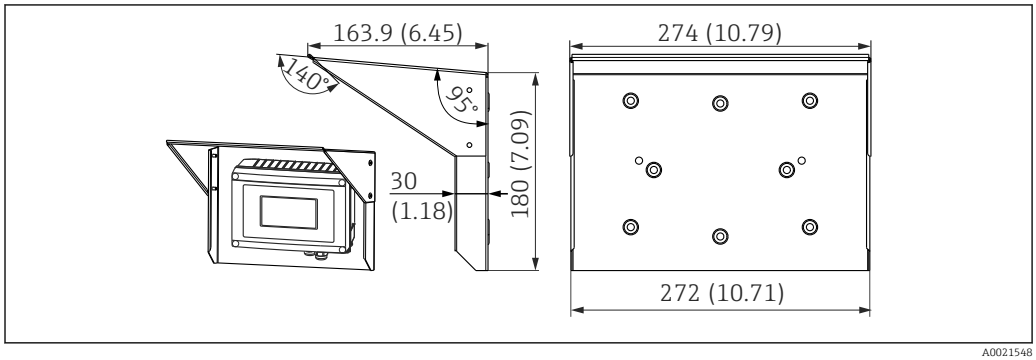

5 Dimensions in mm (in)

Mounting kit for wall/pipe mounting

Order:
- As an additional option in the product structure of the RIA46
- Separately via the order code: RK01-AH

Pipe mounting set

Stainless steel housing W08	71091611

Communication-specific accessories

Designation
Interface cable
Commubox TXU10 incl. FieldCare Device Setup and DTM Library
Commubox FXA291 incl. FieldCare Device Setup and DTM Library

Supplementary documentation

The following types of documentation are available on the product pages and in the Download Area of the Endress+Hauser website (www.endress.com/downloads) (depending on the selected device version):

Document	Purpose and content of the document
Technical Information (TI)	**Planning aid for your device** The document contains all the technical data on the device and provides an overview of the accessories and other products that can be ordered for the device.
Brief Operating Instructions (KA)	**Guide that takes you quickly to the 1st measured value** The Brief Operating Instructions contain all the essential information from incoming acceptance to initial commissioning.
Operating Instructions (BA)	**Your reference document** The Operating Instructions contain all the information that is required in various phases of the life cycle of the device: from product identification, incoming acceptance and storage, to mounting, connection, operation and commissioning through to troubleshooting, maintenance and disposal.
Description of Device Parameters (GP)	**Reference for your parameters** The document provides a detailed explanation of each individual parameter. The description is aimed at those who work with the device over the entire life cycle and perform specific configurations.
Safety Instructions (XA)	Depending on the approval, Safety Instructions (XA) are supplied with the device. The Safety Instructions are an integral part of the Operating Instructions. Information on the Safety Instructions (XA) that are relevant for the device is provided on the nameplate.
Supplementary device-dependent documentation (SD/FY)	Always comply strictly with the instructions in the relevant supplementary documentation. The supplementary documentation is an integral part of the device documentation.



www.addresses.endress.com

Endress+Hauser

People for Process Automation