UNIT	MM

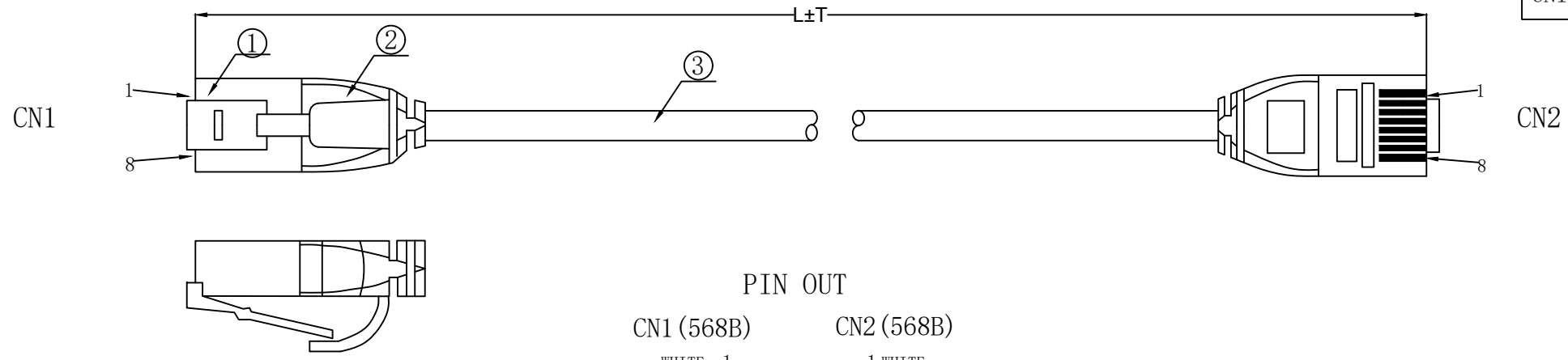

PIN OUT

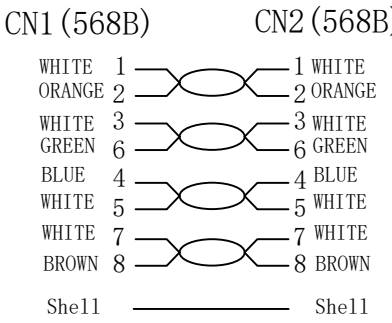

NOTE:

1. Fluke Channel Test ISO 11801 channel Class Ea
2. RoHS 2.0 AND REACH compliant
3. Electrical test:100% open short & miss wire test;
4. Printing:CAT6A U/FTP 4x2x32AWG/7 LSZH ISO11801 & EN50173 & ANSI/TIA568C.2
5. OPERATING TEMPERATURE:-10℃ ~ 60℃

ITEM NO.	LENGTH
21.15.1698	150±10mm
21.15.1699	300±20mm
21.15.1700	500±30mm
21.15.1701	1000±30mm
21.15.1704	1500±50mm
21.15.1702	2000±50mm
21.15.1703	3000±70mm
21.15.1705	5000±70mm

MATERIAL LIST:

NO.	PARTS NAME	SPECIFICATION DESCRIPTION	QT'Y	REMARK
③	CABLE	CAT.6A U/FTP CABLE (32AWG BC*1P+AL-FOIL)*4+DRAIN+JACKET:LSZH White(RAL9003),OD:3.6±0.2mm	1	
②	Over mold	48P PVC White(RAL9003)	2	
①	Plug	RJ45 8P8C Shielded Plug, PIN GOLD PLATED 3u", THE SHELL PLATED NICKEL,TRANSPARENT	2	

BY	CHK	REVISION RECORD MODIFICATIONS	DATE	REV.
		NEW	2022-03-10	A

DESC.	ROLINE Cat. 6A U/FTP Data Center Patch Cord, LSOH, Slim, white

SECOMP