LF 3800/LF 3900 Push-In Fittings

Parker Legris has developed two ranges of **stainless steel fittings** (**LF 3800** or **LF 3900 in full 316L**) for conveying corrosive fluids in **aggressive environments**. These ranges provide two complementary levels of corrosion resistance and a **hygienic external design**.

Product Advantages

High Resistance to Aggressive Environments

- LF 3800: excellent for conveying aggressive fluids
- LF 3900: maximum chemical resistance to internal and external corrosion
- Hygienic external design for reducing retention zones
- Easy cleaning in situ
- Proven gripping technology

Wide Range of Applications

- Perfect for permanent contact with foodstuffs
- Compatible with frequent sterilization
- Excellent in saline environments and outdoor applications
- Resistant to industrial cleaning agents and detergents
- Compatible with polymer and grooved stainless steel tubing
- One fitting for many applications: optimised stock management

Reliability & Safety

- All-metal product allowing detection of all components
- Full bore, with minimal pressure drop
- Resistant to hammering, mechanical shock and impulse
- Manual connection and disconnection, no tools required
- 100% leak-tested in production
- Date coding to guarantee quality and traceability
- IP 51 bulkhead: complete protection against ingress in food and non-food zones



Applications

Food Process
Paper Industry
Petrochemical
Pharmaceutical
Chemical
Medical

Technical Characteristics

Compatible Fluids	All fluids compatible with the fitting and tubing component materials
Working Pressure	Vacuum to 30 bar (20 bar: 3879/3979 and 3889/3989)
Working Temperature	-20° to +150°C

Adaptor Tightening Torque	Threads	M5x0.8	G1/8	G1/4	G3/8	G1/2
	daN.m	0.16	0.8	1.2	3	3.5
Bulkhead Tightening Torque	Ø (mm)	4	6	8	10	12
	daN.m min. max.	 0.5 0.9	 0.5 0.9	 0.6 1	 0.6 1	 0.6 1

Reliable performance is dependent upon the type of fluid conveyed, component materials and tubing being used.
Use is guaranteed with a vacuum of 755 mm Hg (99% vacuum).

Component Materials

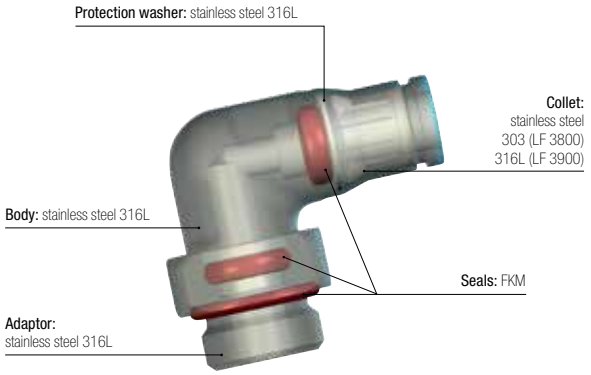

Silicone-free

Regulations

ISO 14743 Pneumatic transmissions, push-in fittings for thermoplastic tubing
DI: 97/23/EC (PED)
DI : 2002/95/EC (RoHS), 2011/65/EC
DI: 94/9/EC (ATEX)
RG : 1907/2006 (REACH)
UL94 V-0: Seal
RG: 21CFR (FDA)
RG: 1935/2004/EC
USDA NSF H1: Grease