440.SR - Non sparking inch combination wrenches



Description:

● Special non sparking and anti-magnetic Copper-Beryllium alloy.

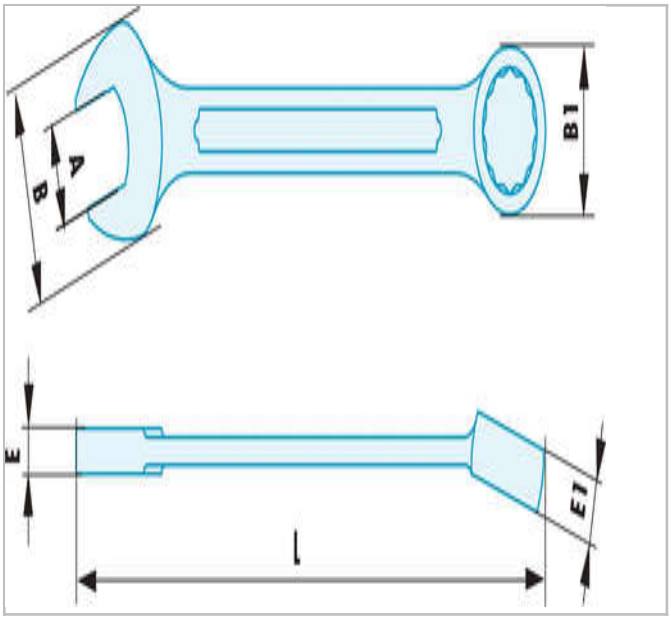

© FACOM 2020

	A [mm]	A [in]	Length L [mm]	Thickness E [mm]	Thickness E1 [mm]	Head Width B [mm]	Head Width B1 [mm]	Weight [g]
440.1/2SR		1/2"	175.0	6.6	10.0	30.0	23.0	75.0
440.1/4SR		1/4"	105.0	4.4	6.0	14.0	11.6	20.0
440.11/16SR		11/16"	195.0	7.6	11.0	35.0	27.0	155.0
440.13/16SR		13/16"	230.0	9.5	13.5	45.0	34.0	225.0
440.15/16SR		15/16"	265.0	10.0	15.2	49.0	38.0	260.0
440.19/32SR		19/32"	195.0	7.6	11.0	35.0	27.0	125.0
440.1P1/16SR		1` 1/16"	290.0	11.4	17.0	56.0	42.0	420.0
440.1P1/4SR		1` 1/4"	340.0	14.0	21.0	65.0	52.0	670.0
440.1P1/8SR		1` 1/8"	320.0	13.0	20.0	61.0	49.0	560.0
440.1P3/16SR		1` 3/16"	320.0	13.0	20.0	61.0	49.0	560.0
440.1P3/8SR		1` 3/8"	360.0	15.0	21.0	72.0	55.0	890.0
440.1P5/16SR		1` 5/16"	360.0	15.0	21.0	72.0	52.0	850.0
440.1PSR	1.0		290.0	11.4	17.0	56.0	42.0	260.0
440.3/4SR		3/4"	215.0	8.0	12.0	39.0	31.0	210.0
440.3/8SR		3/8"	135.0	5.4	8.0	22.0	18.0	55.0
440.5/16SR		5/16"	120.0	5.0	7.0	17.5	14.5	40.0
440.5/8SR		5/8"	195.0	7.6	11.0	35.0	27.0	155.0
440.7/16SR		7/16"	150.0	6.0	9.0	26.5	21.0	55.0
440.7/8SR		7/8"	245.0	9.4	14.0	46.0	36.0	250.0
440.9/16SR		9/16"	175.0	6.6	10.0	30.0	23.0	120.0

© FACOM 2020