X20MM4331

1 General information

The 4 outputs on the motor module are designed as half-bridge outputs. The continuous current per channel is 3 A at a peak current of up to 5 A. Integrated diagnostics offer the possibility to read back the output current for each channel using the application.

The module offers extensive possibilities for controlling motors, valves or resistive loads and is particularly well suited for controlling brush DC motors. The outputs can be switched on/off and short-circuited.

- 4 half-bridge outputs
- High component density
- 3 A continuous current
- 5 A peak current
- Readable current

2 Order data

Order number	Short description	Figure
	Motor controllers	
X20MM4331	X20 digital motor module, 24 VDC, 4 digital outputs, half bridge, 3 A continuous current, 5 A peak current	
	Required accessories	
	Bus modules	
X20BM11	X20 bus module, 24 VDC keyed, internal I/O supply continuous	
X20BM15	X20 bus module, with node number switch, 24 VDC keyed, internal I/O power supply connected through	
	Terminal blocks	
X20TB12	X20 terminal block, 12-pin, 24 VDC keyed	

Table 1: X20MM4331 - Order data

3 Technical data

Order number	X20MM4331
Short description	
I/O module	4 half bridge outputs
General information	
B&R ID code	0xA976
Status indicators	I/O function per channel, operating state, module status
Diagnostics	
Module run/error	Yes, using LED status indicator and software
Output	Yes, using LED status indicator and software
I/O power supply	Yes, using LED status indicator and software
Power consumption	
Bus	0.01 W
Internal I/O	0.8 W
External I/O	Corresponding to external load
Additional power dissipation caused by actuators (resistive) [W]	-

Table 2: X20MM4331 - Technical data

Order number	X20MM4331
Certifications	
CE	Yes
ATEX	Zone 2, II 3G Ex nA nC IIA T5 Gc IP20, Ta (see X20 user's manual) FTZÚ 09 ATEX 0083X
UL	cULus E115267 Industrial control equipment
HazLoc	cCSAus 244665 Process control equipment for hazardous locations Class I, Division 2, Groups ABCD, T5
EAC	Yes
KC	Yes
Motor bridge - Power unit	
Quantity	4
Type	Half bridge High-side driver Low-side driver
Nominal voltage	24 VDC
Switching voltage	24 VDC (-15% / +20%)
Nominal current	3 A
Maximum current	5 A (250 ms)
Total nominal current	10 A
Current value measurement	
Resolution	100 mA
Data collection	In high side branch
Output protection	Thermal shutdown in the event of overcurrent or short circuit
Supply voltage	No reverse polarity protection
Insulation voltage between channel and bus	500 V_{eff}
Protective circuit	
External	24 VDC power supply - maximum current 10 A (melting fuse)
Digital outputs	
Quantity	4
Nominal voltage	24 VDC
Output protection	Thermal shutdown in the event of overcurrent or short circuit
Type	Half bridge High-side driver (source) Low-side driver (sink)
Max. continuous current per output	3 A
Max. module current	10 A
Recording current value on high branch	
Resolution	100 mA
Electrical properties	
Electrical isolation	Bus isolated from channel and internal I/O power supply Channel not isolated from channel and internal I/O power supply
Operating conditions	
Mounting orientation	
Horizontal	Yes
Installation elevation above sea level	
0 to 2000 m	No limitation
>2000 m	Reduction of ambient temperature by 0.5°C per 100 m
Degree of protection per EN 60529	IP20
Ambient conditions	
Temperature	
Operation	
Horizontal mounting orientation	0 to 50°C
Vertical mounting orientation	Not permitted
Derating	See section "Derating".
Storage	-25 to 70°C
Transport	-25 to 70°C
Relative humidity	
Operation	5 to 95%, non-condensing
Storage	5 to 95%, non-condensing
Transport	5 to 95%, non-condensing
Mechanical properties	
Note	Order 1x terminal block X20TB12 separately. Order 1x bus module X20BM11 separately.
Pitch	$12.5^{+0.2}$ mm

Table 2: X20MM4331 - Technical data

4 LED status indicators

For a description of the various operating modes, see section "Additional information - Diagnostic LEDs" in the X20 system user's manual.

Figure	LED	Color	Status	Description
	r	Green	Off	No power to module
			Single flash	RESET mode
			Blinking	PREOPERATIONAL mode
			On	RUN mode
	e	Red	Off	No power to module or everything OK
			On	Error or reset status
	e + r	Red on / Green single flash		Invalid firmware
	1 - 4	Orange	On	The respective output is active.
			Blinking	Error on the corresponding output
			Off	The respective output is switched off.

5 Pinout

Lines with a cross section between a minimum of 0.75 mm² and a maximum of 2.5 mm² are recommended for the outputs.

Warning!

The terminal block is not permitted to be plugged in or unplugged during operation.

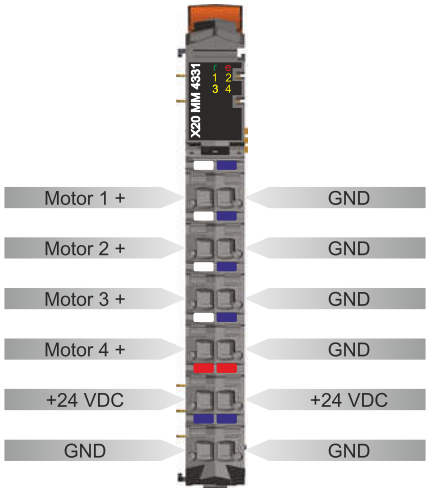

6 Connection example

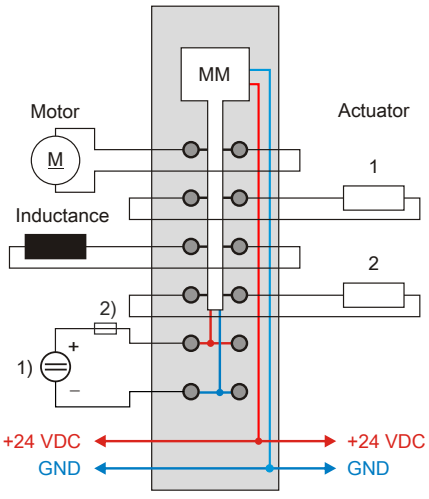

1) 24 VDC supply
2) 10 A slow-blow fuse

7 Output circuit diagram

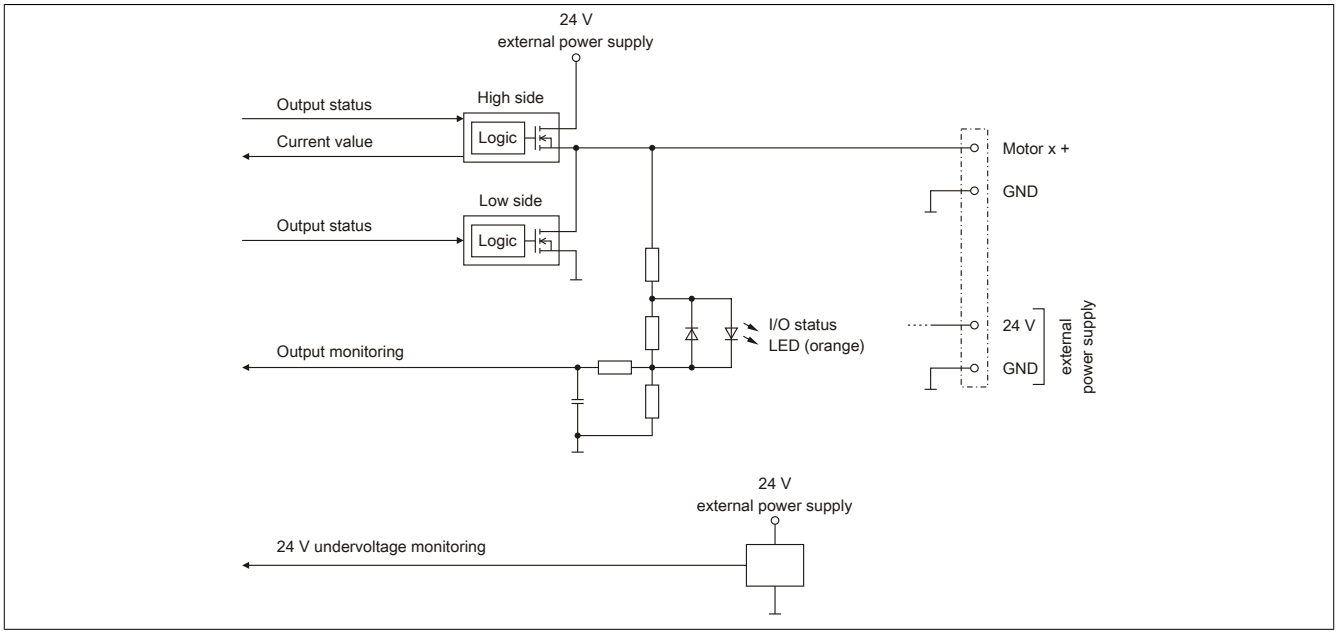

8 Function description - Motor operation

Four DC motors can be operated with the module. Each output is designed as a half-bridge.

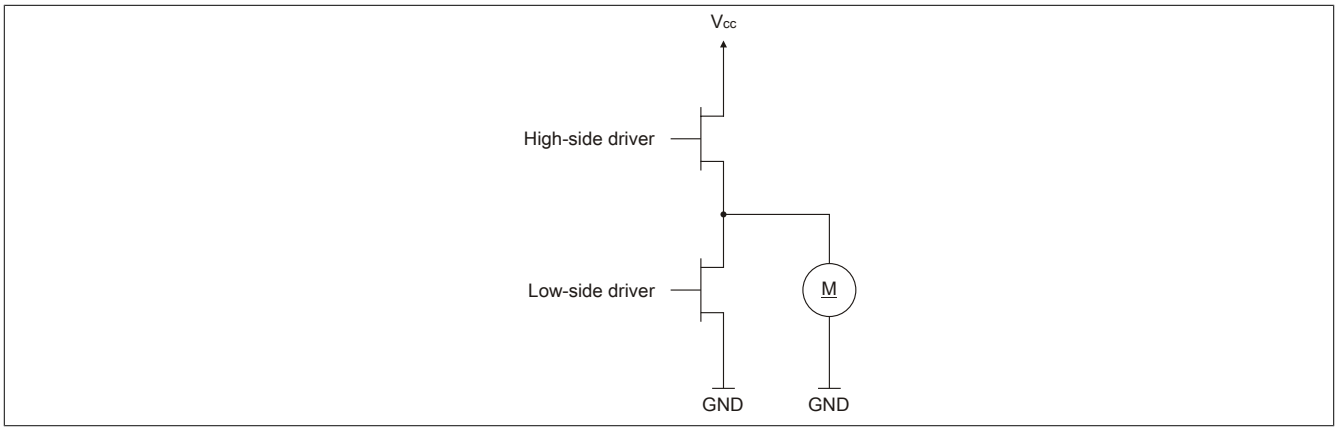

Description of the operating modes based on the schematic diagram shown above:

Operating mode	Description
Motor is running	If the high-side driver is active, the motor is switched on.
Brakes	If motor braking should take place, the high-side driver is first switched off and then the low-side driver is activated. In this way, the motor windings are short-circuited and the motor braking takes place.

9 Protection

The power supply line should be protected by a circuit breaker or a fuse. In general, dimensioning the supply line and overcurrent protection depends on the structure of the power supply (modules can be connected individually or in groups).

Information:

The effective current for the power supply depends on the load but is always less than the sum of the output currents. Make sure that the maximum permissible nominal current of 10 A per pin is not exceeded on the power supply terminal of the power unit.

When choosing a suitable fuse, the user must also account for characteristics such as aging effects, temperature derating, overcurrent capacity and the definition of the rated current, which can vary by manufacturer and type. In addition, the fuse that is selected must also be able to handle application-specific characteristics (e.g. overcurrent that occurs in acceleration cycles).

The cross section of the power mains and the rated current of the overcurrent protection used are chosen according to the current load so that the maximum current load for the cable cross section selected (based on the type of layout, see table) is greater than or equal to the current load in the power mains. The rated current of the overcurrent protection must be less than or equal to the maximum current load for the cable cross section selected (based on the type of layout, see table):

$I_{Mains} \leq I_b \leq I_Z$

Mains ≤ Fuse ≤ Line/cable

Wire cross section [mm²]	Current load of the cable cross section I_Z / rated current of the over current protection I_b [A] according to type of installation in an ambient air temperature of 40°C in accordance to EN 60204-1			
	B1	**B2**	**C**	**E**
1.5	13.5 / 13	13.1 / 10	15.2 / 13	16.1 / 16
2.5	18.3 / 16	16.5 / 16	21 / 20	22 / 20
4	24 / 24	23 / 20	28 / 25	30 / 25
6	32 / 32	29 / 25	36 / 32	37 / 32

Table 3: Cable cross section of the mains supply line depending on the type of layout

The tripping current of the fuse cannot exceed the rated current of fuse I_b.

Type of layout	Description
B1	Wires in conduit or cable duct
B2	Cables in conduit or cable duct
C	Cables or wires on walls
E	Cables or wires on open cable tray

Table 4: Type of layout for the mains supply line

10 Derating

In order to be able to operate the motor module over the entire temperature range, only modules with a maximum power loss of of 0.5 W can be installed next to the motor module or respective turn-off times must be implemented.

If the neighboring modules have a higher power loss and all channels are operated continuously, the motor current must be derated.

When a motor is switched on, the current is increased for a short time. This behavior has no influence on the derating.

Current derating 1 of the motor module

Current derating for the motor module for neighboring modules with ≤1.8 W thermal power loss.

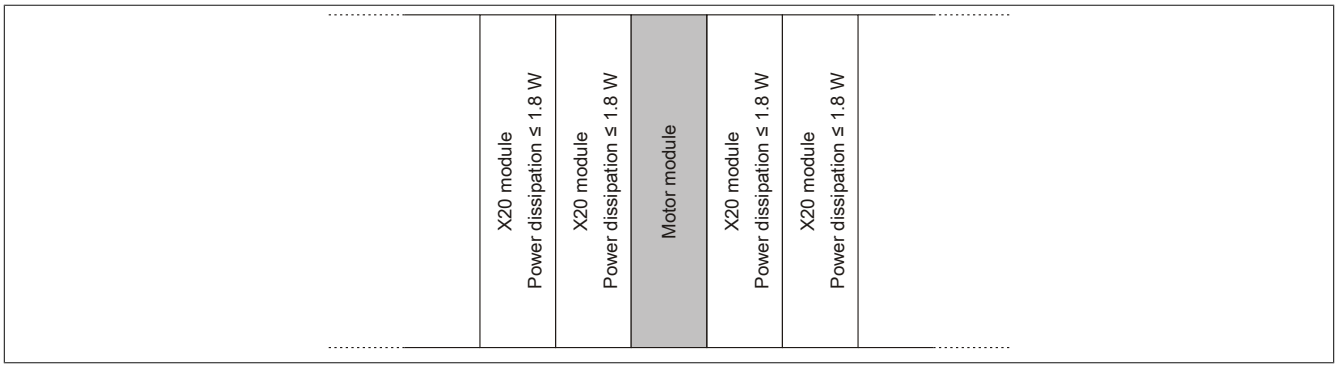

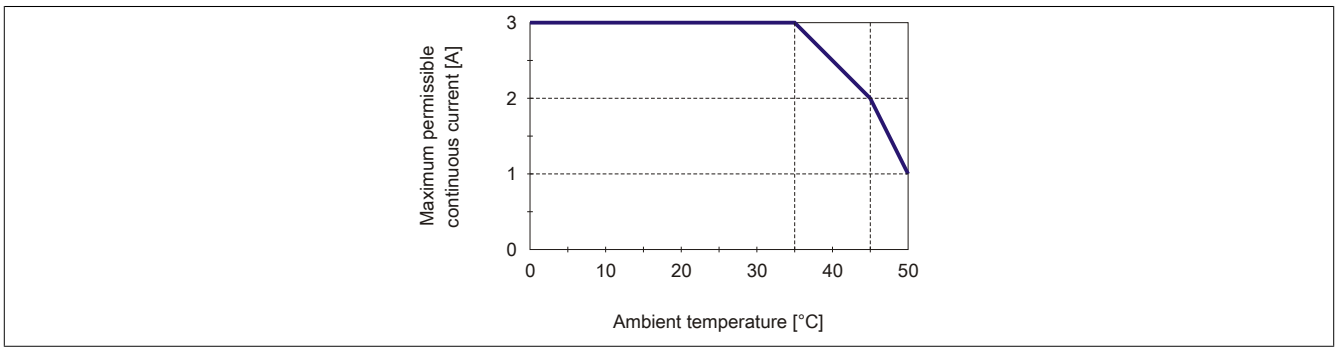

Current derating 2 of the motor module

Current derating for the motor module for neighboring modules with ≤1 W thermal power loss.

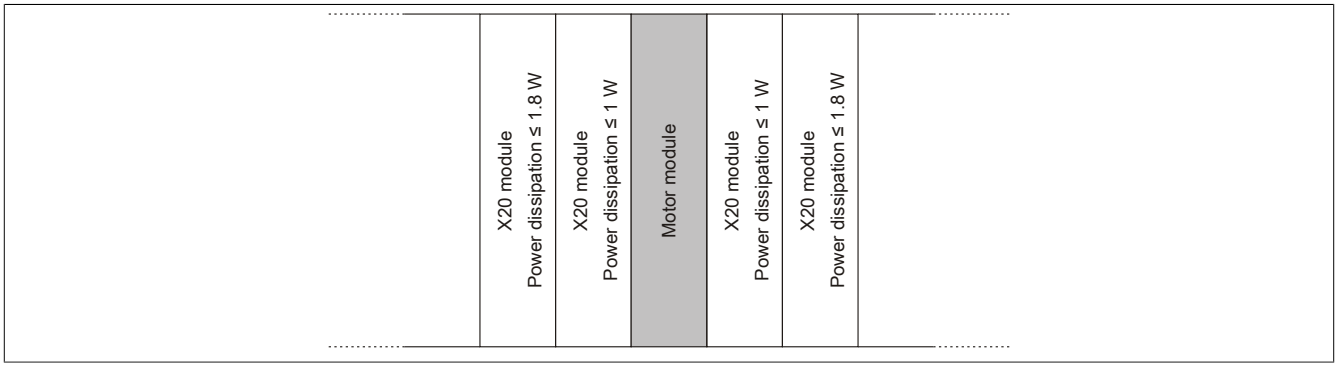

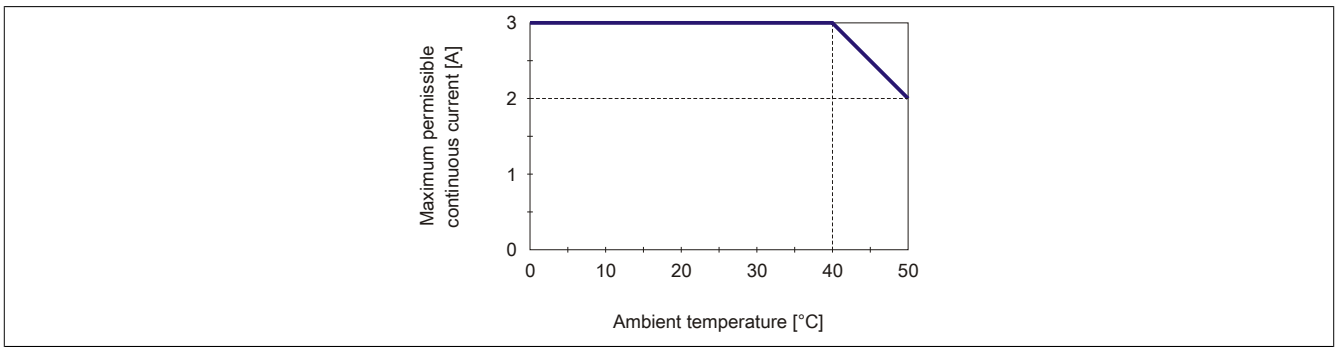

Current derating 3 of the motor module

Current derating with multiple motor modules next to each other.

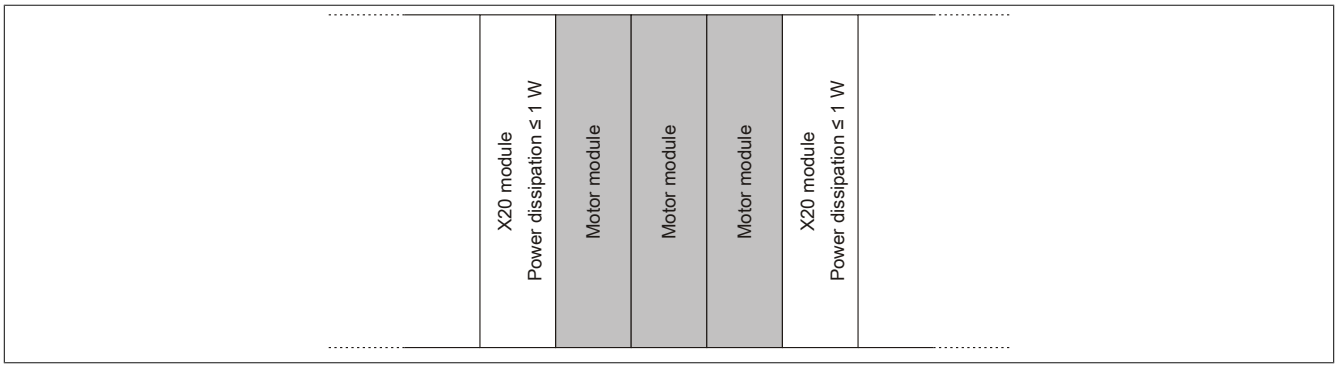

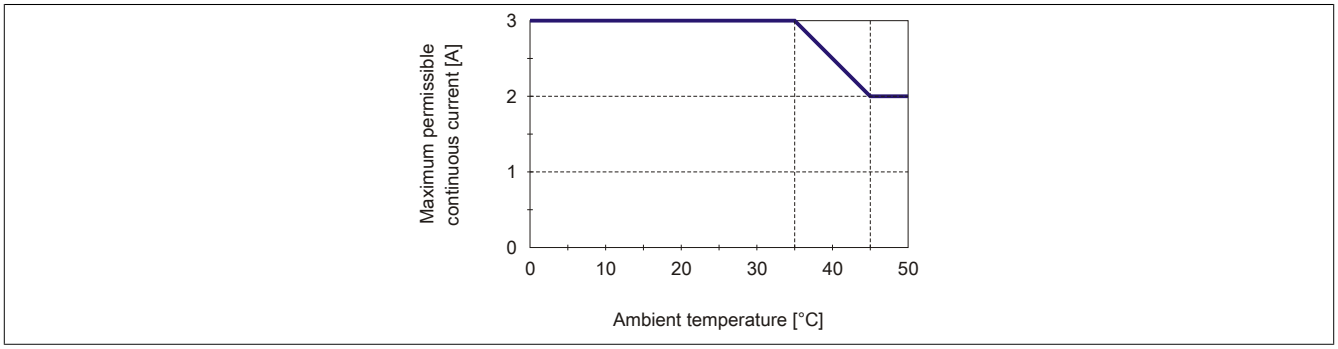

11 Switching inductive loads (e.g. valves)

All outputs with the same load.

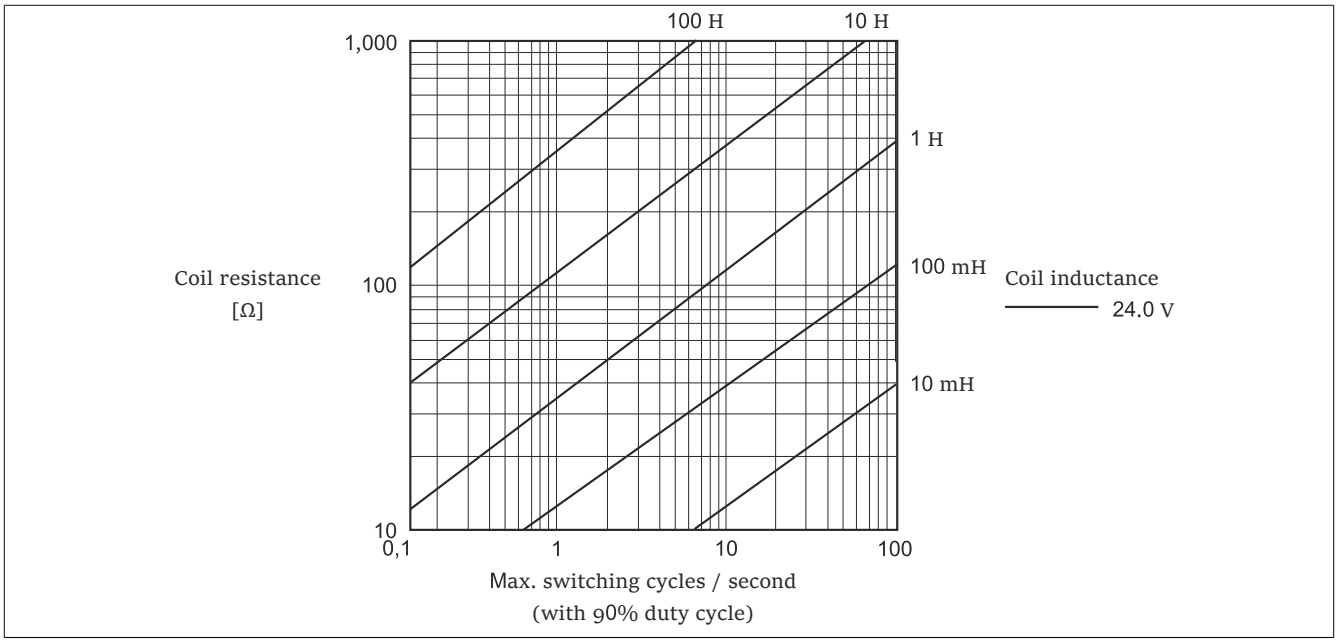

12 Monitoring the module supply

The module supply is continually monitored. If the supply voltage drops below 18V, all channels are switched off and an error bit is set.

Information:

The undervoltage must be present for longer than 250 ms, before all channels are switched off. Power dips can occur when starting motors or capacitive loads!

13 Monitoring the module current

The module current is continually monitored. If an overcurrent occurs, the respective channel is switched off and an error bit is set.

Information:

The overcurrent must be present for longer than 250 ms, before the channel is switched off. High starting currents occur when starting motors or capacitive loads!

14 Channel monitoring

After each switching operation, the status inputs are checked with a delay of 2 ms. This is done to avoid a faulty status signal when switching the motors or capacitive loads.

If the status of the output does not correspond to the status that is expected (e.g. short circuit or motor spin-out), a warning bit is set.

Information:

If channel monitoring responds, it is a warning. The output remains enabled even if a short circuit occurs. Due to the internal protective circuit, the output is switched on again cyclically to check the error state.

If the motor is still spinning out, the voltage drops slowly. That means the warning bit "StatusDigitalOutput" on page 12 can show a warning while the motor is spinning out.

If the motor is moved externally, voltage is induced into the module, which results in StatusDigitalOutput being set and the red LED being lit (warning).

15 Overtemperature shutdown

If the module temperature reaches or overshoots the limit value of 85°C, the module performs the following actions:

- Sets the "overtemperature" error bit
- Cuts off the outputs (short-circuited)

As soon as the temperature is reduced below 85°C again, the error must be acknowledged with OvertemperatureAcknowledge so that the channels can be switched on again.

16 Register description

16.1 General data points

In addition to the registers described in the register description, the module has additional general data points. These are not module-specific but contain general information such as serial number and hardware variant.

General data points are described in section "Additional information - General data points" in the X20 system user's manual.

16.2 Function model 0 - Standard

In this function model, control of full bridges takes place using 3 bits per channel.

Register	Name	Data type	Read		Write	
			Cyclic	Acyclic	Cyclic	Acyclic
Configuration						
0	Motor configuration - Default	USINT			•	
	StartChannel01	Bit 0				
	ShortCircuitChannel01	Bit 1				
	StartChannel02	Bit 2				
	ShortCircuitChannel02	Bit 3				
	StartChannel03	Bit 4				
	ShortCircuitChannel03	Bit 5				
	StartChannel04	Bit 6				
	ShortCircuitChannel04	Bit 7				
18	Error acknowledged	USINT			•	
	OvercurrentAcknowledge01	Bit 0				
	...	...				
	OvercurrentAcknowledge04	Bit 3				
	OvertemperatureAcknowledge	Bit 5				
	UndervoltageAcknowledge	Bit 6				
Communication						
2 + N * 2	CurrentInput0N (Index N = 1 to 4)	USINT	•			
20	Status of current and channels	USINT	•			
	OvercurrentError01	Bit 0				
	...	...				
	OvercurrentError04	Bit 3				
	StatusDigitalOutput01	Bit 4				
	...	...				
	StatusDigitalOutput04	Bit 7				
21	Module status	USINT	•			
	OvertemperatureError	Bit 0				
	UndervoltageError	Bit 1				

16.3 Function model 1 - Byte control and Function model 254 - bus controller

The half bridges in this function model are controlled using one byte (2 bits per channel). All other registers are the same as in Function model 0 - Standard.

Register	Offset[1)]	Name	Data type	Read		Write	
				Cyclic	Acyclic	Cyclic	Acyclic
Configuration							
0	0	Motor configuration - Byte control	USINT			•	
18	12	Error acknowledged	USINT			•	
		OvercurrentAcknowledge01	Bit 0				
		...	...				
		OvercurrentAcknowledge04	Bit 3				
		OvertemperatureAcknowledge	Bit 5				
		UndervoltageAcknowledge	Bit 6				
Communication							
2 + N * 2	2 + N * 2	CurrentInput0N (Index N = 1 to 4)	USINT	•			
20	8	Status of current and channels	USINT	•			
		OvercurrentError01	Bit 0				
		...	...				
		OvercurrentError04	Bit 3				
		StatusDigitalOutput01	Bit 4				
		...	...				
		StatusDigitalOutput04	Bit 7				
21	10	Module status	USINT	•			
		OvertemperatureError	Bit 0				
		UndervoltageError	Bit 1				

1) The offset specifies the position of the register within the CAN object.

16.3.1 Using the module on the bus controller

Function model 254 "Bus controller" is used by default only by non-configurable bus controllers. All other bus controllers can use other registers and functions depending on the fieldbus used.

For detailed information, see section "Additional information - Using I/O modules on the bus controller" in the X20 user's manual (version 3.50 or later).

16.3.2 CAN I/O bus controller

The module occupies 2 analog logical slots on CAN I/O.

16.4 Configuration

16.4.1 Motor configuration - Default

Name:
StartChannel01 to StartChannel04
ShortCircuitChannel01 to ShortCircuitChannel04

This register contains the control bits for all channels.

Data type	Values
USINT	See the bit structure.

Bit structure:

Bit			Description
0	StartChannel01	0	Switch off channel 1
		1	Channel 1 is started (bridge control)
1	ShortCircuitChannel01	0	Do not short circuit channel 1.
		1	Short circuit channel 1.
2	StartChannel02	0	Switch off channel 2
		1	Channel 2 is started (bridge control)
3	ShortCircuitChannel02	0	Do not short circuit channel 2.
		1	Short circuit channel 2.
4	StartChannel03	0	Switch off channel 3
		1	Channel 3 is started (bridge control)
5	ShortCircuitChannel03	0	Do not short circuit channel 3.
		1	Short circuit channel 3.
6	StartChannel04	0	Switch off channel 4
		1	Channel 4 is started (bridge control)
7	ShortCircuitChannel04	0	Do not short circuit channel 4.
		1	Short circuit channel 4.

Information:

To avoid internal bridge shorts, the outputs are delayed by 200 µs when switching to another state or a short circuit.

16.4.2 Motor configuration - Byte control

Name:
ControlByte01

This register is used to control all four channels. Two bits per channels are always grouped together. This register is only used in Function model 1 - Byte control and Function model 254 - bus controller.

Data type	Values
USINT	See the bit structure.

Bit structure:

Bit			Description
0 - 1	Channel 1	00	Off
		01	On
		10	Off
		11	Short circuit
...		...	
6 - 7	Channel 4	00	Off
		01	On
		10	Off
		11	Short circuit

16.4.3 Error acknowledged

Name:
OvercurrentAcknowledge01 to OvercurrentAcknowledge04
OvertemperatureAcknowledge
UndervoltageAcknowledge

This register contains bits used to acknowledge an overcurrent error, an undervoltage error and an overtemperature error.

The errors are acknowledged with a rising edge. An existing error can only be acknowledged if the cause of the error has been corrected.

Data type	Values
USINT	See the bit structure.

Bit structure:

Bit			Description
0	OvercurrentAcknowledge01	1	With a rising edge, the overcurrent error shown on channel 1 is acknowledged.
...		...	
3	OvercurrentAcknowledge04	1	With a rising edge, the overcurrent error shown on channel 4 is acknowledged.
4 - 5	Reserved	-	
6	OvertemperatureAcknowledge	1	With a rising edge, the overtemperature error shown is acknowledged.
7	UndervoltageAcknowledge	1	With a rising edge, the undervoltage error shown is acknowledged.

16.5 Communication

16.5.1 Voltage of the channels

Name:
CurrentInput01 to CurrentInput04

Every 500 µs, the current that flows through a channel is measured with a resolution of 8 bits. The value measured is stored in these registers.

Data type	Value	Information
USINT	0 to 255	0 to 5 A

16.5.2 Status of current and channels

Name:
OvercurrentError01 to OvercurrentError04
StatusDigitalOutput01 to StatusDigitalOutput04

Some operating states are monitored by the module. They are:

- "Module current" on page 8
- "Status channels" on page 8

The states are stored in this register. For other operating modes, see "Module status" on page 13

Data type	Values
USINT	See the bit structure.

Bit structure:

Bit			Description
0	OvercurrentError0	0	No overcurrent on channel 1
		1	Overcurrent on channel 1
...		...	
3	OvercurrentError04	0	No overcurrent on channel 4
		1	Overcurrent on channel 4
4	StatusDigitalOutput01	0	Channel 1 output status OK
		1	Channel 1 output warning: Short-circuit or invalid output status
...		...	
7	StatusDigitalOutput04	0	Channel 4 output status OK
		1	Channel 4 output warning: Short-circuit or invalid output status

16.5.3 Module status

Name:
OvertemperatureError
UndervoltageError

Some operating states are monitored by the module. They are:

- "Module supply" on page 8
- "Module temperature" on page 8

The states are stored in this register. For other operating modes, see "Status of current and channels" on page 12

Data type	Values
USINT	See the bit structure.

Bit structure:

Bit			Description
0	OvertemperatureError	0	Module temperature within permitted range
		1	Module overtemperature error
1	UndervoltageError	0	Supply voltage within permitted range
		1	Supply voltage has dropped below 18V
2 - 7	Reserved	-	

16.6 Minimum cycle time

The minimum cycle time specifies how far the bus cycle can be reduced without communication errors occurring. It is important to note that very fast cycles reduce the idle time available for handling monitoring, diagnostics and acyclic commands.

Minimum cycle time
400 µs

16.7 Minimum I/O update time

The minimum I/O update time specifies how far the bus cycle can be reduced so that an I/O update is performed in each cycle.

Minimum I/O update time
400 µs