DATA SHEET

Type 6014

bürkert
FLUID CONTROL SYSTEMS









Plunger valve 3/2 way direct-acting

- Direct-acting, compact valve with diameter of up to DN 2.5
- Vibration-proof, bolted coil system
- Banjo threaded connection for direct mounting on pneumatic valves
- Service-friendly manual override
- Energy-saving impulse versions

Product variants described in the data sheet may differ from the product presentation and description.

Can be combined with



Type 2513 ▸
Cable plug according to DIN EN 175301-803 connector shape A



Type 2511 ▸
Cable Plug Form A



Type 2518 ▸
Cable Plug DIN EN 175301-803 - Form A



Type 1087 ▸
Timer

Type description

Valve 6014 is a direct-acting plunger valve. The stopper and plunger guide tube are welded together to enhance pressure resistance and leak-tightness. Various seal material combinations are available depending on the application. A Bürkert-specific flange design (SFB) enables space-saving arrangement of valves on a manifold. The coils are moulded with polyamide or with chemically resistant epoxy. Pulse coils are available for the reduction of electrical power consumption during operation. Optional manual actuation enables quick commissioning and easy maintenance. In combination with a plug in accordance with DIN EN 175301-803 Form A, the valves satisfy protection class IP65. Stainless steel valves satisfy NEMA 4X.

DTS 1000011035 EN Version: Q Status: RL (released | freigegeben | validé) printed: 21.10.2021

© Christian Bürkert GmbH & Co. KG, Subject to alteration

Visit product website ▸

Table of contents

1. General Technical Data 4

2. Circuit functions 4

3. Approvals 5

4. Materials 5

4.1. Chemical Resistance Chart – Bürkert resistApp....5
4.2. Material specifications....5
Standard version....5
Banjo version....6
ATEX/IECEx m cable version....6
ATEX/IECEx m junction box version....7

5. Dimensions 8

5.1. Standard version....8
PIN Assignments....8
5.2. Banjo version....9
5.3. ATEX/IECEx m cable version....10
5.4. ATEX/IECEx m junction box version....11
5.5. ATEX/IECEx ia....12
5.6. Manifold mounting....13
Single manifold....13
Multiple manifold....14

6. Performance specifications 14

6.1. Power consumption....14
6.2. Utilisation in another circuit function....15
6.3. Electrical data....15

7. Product installation 16

7.1. Installation notes....16
Control for impulse version with polarity reversal control....16
Manifolds for block mounting....16

8. Product accessories 16

8.1. Cable glands for ATEX/IECEx terminal box....16
8.2. Special tool to turn the junction box....17

9. Ordering information 17

9.1. Bürkert eShop – Easy ordering and quick delivery....17
9.2. Bürkert product filter....17
9.3. Ordering chart....18
Standard version....18
Banjo version....20
ATEX/IECEx m cable version....21
ATEX/IECEx m junction box version....22
ATEX/IECEx ia version....23

DTS 1000011035 EN Version: Q Status: RL (released | freigegeben | validé) printed: 21.10.2021

9.4. Ordering chart accessories 24
Cable plug Type 2518, Form A according to DIN EN 175301-803 24
Cable plug Type 2513, form A acc. to DIN EN 175301 - 803 24
Cable glands for ATEX/IECEx terminal box 24
Manifold mounting 24

DTS 1000011035 EN Version: Q Status: RL (released | freigegeben | validé) printed: 21.10.2021

DTS 1000011035 EN Version: Q Status: RL (released | freigegeben | validé) printed: 21.10.2021

1. General Technical Data

Product properties	
Dimensions	Detailed information can be found in chapter "5. Dimensions" on page 8.
Material	
Seal	FKM (EPDM on request)
Body	Brass or stainless steel, polyamide (sub-base)
Coil	Polyamide (Epoxy on request)
Nominal diameter	DN1.5…DN2.5
Thermal insulation class of solenoid	Polyamide class B (Epoxy class H on request)
Performance data	
Duty cycle / single valve assembly	100 % continuous rating Intermittent operation 60 % (30 min) or with 5 W coil (on request)
Circuit function	C, D and T (see "2. Circuit functions" on page 4)
Electrical data	
Operating voltage	24 V DC, 24 V/50 Hz, 230 V/50 Hz (other voltages on request)
Voltage tolerance	±10 %
Medium data	
Medium temperature	-10 °C… +100 °C (PA coil) -10 °C… +120 °C (Epoxy coil)
Operating medium	Neutral gases and fluids (e.g. compressed air, town gas, natural gas, water, hydraulic oil, petrol). Suitable for technical vacuum.
Viscosity	Max. 21 mm^2/s
Process/Port connection & communication	
Electrical connection	DIN EN 175 301-803 Form A for cable plug Type 2518 (see "9.4. Ordering chart accessories" on page 24) ATEX/IECEx version with 3 m moulded cable
Port connection	G ⅛, G ¼, sub-base (SFB)
Approvals and certificates	
Degree of protection	IP65 with cable plug, ATEX/IECEx junction box version and cable connection version NEMA 4x with cable plug 2518 or 2509 only for stainless steel versions (other versions on request)
Environment and installation	
Installation position	Any, preferably actuator upright
Ambient temperature	Max. +55 °C

2. Circuit functions

Circuit functions	Description
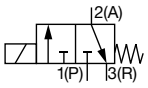	**Type: C, solenoid valve** 3/2 way Direct-acting Normally closed
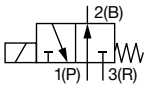	**Type: D, solenoid valve** 3/2 way Direct-acting Normally opened
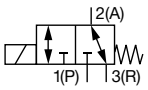	**Type: T, solenoid valve** 3/2 way Direct-acting Flow direction optional

3. Approvals

ATEX and IECEx approval for coils with fixed cable outlet	
ATEX: EPS 18 ATEX 1232 X II 2G Ex mb IIC T4 Gb II 2D Ex mb IIIC T130 °C Db	IECEx: IECEx EPS 18.0110X Ex mb IIC T4 Gb Ex mb IIIC T130 °C Db
Explosion-proof approvals	
ATEX: PTB 01 ATEX 2101 0102 II 2G Ex i IIC T6 Gb II 2D Ex i IIIC T85 °C Db	IECEx: PTB IECEX12,0040 Ex ia IIC T6 Gb Ex ia IIC T80 °C Db

4. Materials

4.1. Chemical Resistance Chart – Bürkert resistApp



Bürkert resistApp – Chemical Resistance Chart

You want to ensure the reliability and durability of the materials in your individual application case? Verify your combination of media and materials on our website or in our resistApp.

Start Chemical Resistance Check

4.2. Material specifications

Standard version

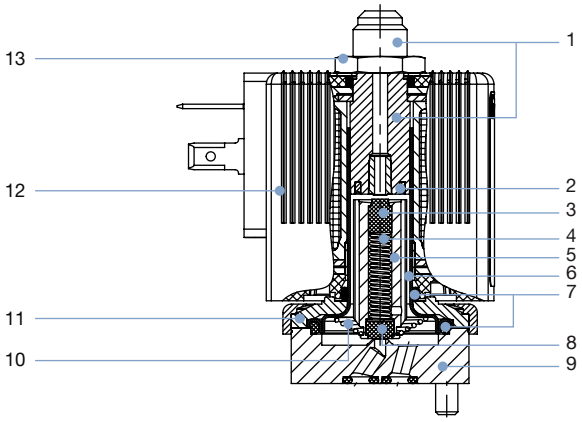

No.	Element	Material
1	Stopper	Stainless steel 1.4105
2	Shading ring	Cu (brass version) Ag (stainless steel version)
3	Plunger seal	FKM
4	Spring	Stainless steel 1.4310
5	Magnetic core	Stainless steel 1.4105
6	Armature guide tube	Stainless steel 1.4303
7	O-rings	FKM
8	Plunger seal	FKM
9	Valve body	Brass Stainless steel 1.4305 (G ⅛) Stainless steel 1.4401 (G ¼)
10	Spring	Stainless steel 1.4310
11	Sub-base	Steel, surface finish thick-film passivated (brass version) Stainless steel 1.4301 (stainless steel version)
12	Coil	PA (Polyamide) Epoxy (High temperature version)
13	Locknut	Steel, surface finish thick-film passivated (brass version) Stainless steel 1.4305 PTFE coated (stainless steel version)

DTS 1000011035 EN Version: Q Status: RL (released | freigegeben | validé) printed: 21.10.2021

Banjo version

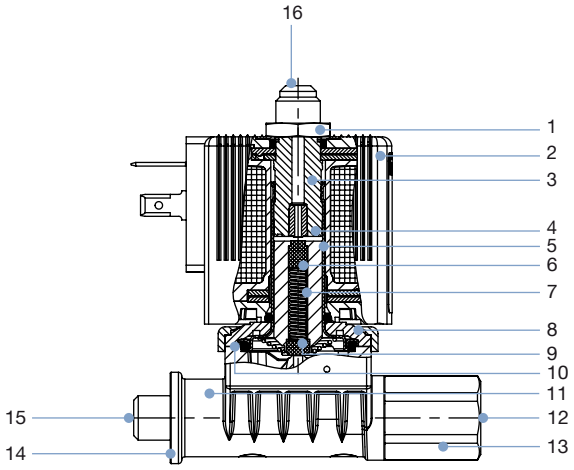

No.	Element	Material
1	Locknut	Steel, surface finish thick-film passivated (brass version) Stainless steel 1.4305 PTFE coated (stainless steel version)
2	Coil	PA (Polyamide) Epoxy (High temperature version)
3	Stopper	Stainless steel 1.4105
4	Shading ring	Cu (brass version) Ag (stainless steel version)
5	Armature guide tube	Stainless steel 1.4303
6	Magnetic core	Stainless steel 1.4105
7	Spring	Stainless steel 1.4310
8	Sub-base	Steel, surface finish thick-film passivated (brass version) Stainless steel 1.4301 (stainless steel version)
9	Plunger seal	FKM
10	O-rings	FKM
11	Valve body	PPS
12	Pressure connection P	–
13	Screw	Brass / Stainless steel 1.4301
14	O-rings	NBR
15	Pressure connection A	–
16	R connection	–

ATEX/IECEx m cable version

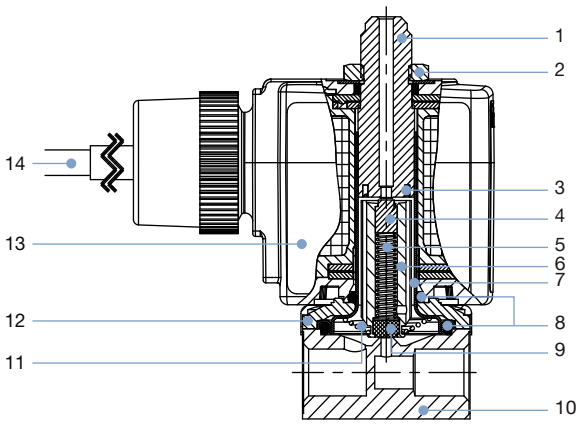

No.	Element	Material
1	Stopper	Stainless steel 1.4105
2	Locknut	Steel, surface finish thick-film passivated (brass version) Stainless steel 1.4305 PTFE coated (stainless steel version)
3	Shading ring	Cu (brass version) Ag (stainless steel version)
4	Plunger seal	FKM
5	Spring	Stainless steel 1.4310
6	Magnetic core	Stainless steel 1.4105
7	Armature guide tube	Stainless steel 1.4303
8	O-rings	FKM
9	Plunger seal	FKM
10	Valve body	Brass Stainless steel 1.4305 (G ⅛) Stainless steel 1.4401 (G ¼)
11	Spring	Stainless steel 1.4310
12	Sub-base	Steel, surface finish thick-film passivated (brass version) Stainless steel 1.4301 (stainless steel version)
13	Coil	Epoxy
14	Cable	Polyolefin Copolymer, electron beam cross-linked

DTS 1000011035 EN Version: Q Status: RL (released | freigegeben | validé) printed: 21.10.2021

ATEX/IECEx m junction box version

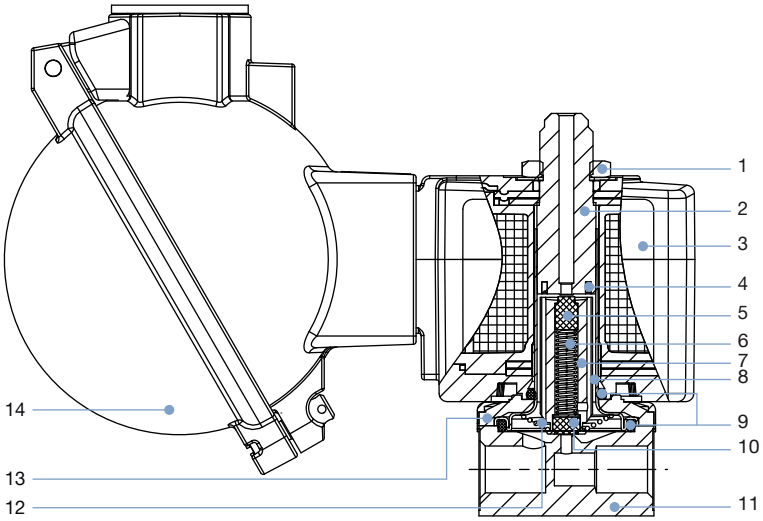

No.	Element	Material
1	Locknut	Steel, surface finish thick-film passivated (brass version) Stainless steel 1.4305 PTFE coated (stainless steel version)
2	Stopper	Stainless steel 1.4105
3	Coil	Epoxy
4	Shading ring	Cu (brass version) Ag (stainless steel version)
5	Plunger seal	FKM
6	Spring	Stainless steel 1.4310
7	Magnetic core	Stainless steel 1.4105
8	Armature guide tube	Stainless steel 1.4303
9	O-rings	FKM
10	Plunger seal	FKM
11	Valve body	Brass Stainless steel 1.4305 (G ⅛) Stainless steel 1.4401 (G ¼)
12	Spring	Stainless steel 1.4310
13	Sub-base	Steel, surface finish thick-film passivated (brass version) Stainless steel 1.4301 (stainless steel version)
14	Junction box	Aluminium

DTS 1000011035 EN Version: Q Status: RL (released | freigegeben | validé) printed: 21.10.2021

5. Dimensions

5.1. Standard version

Note:
Dimensions in mm

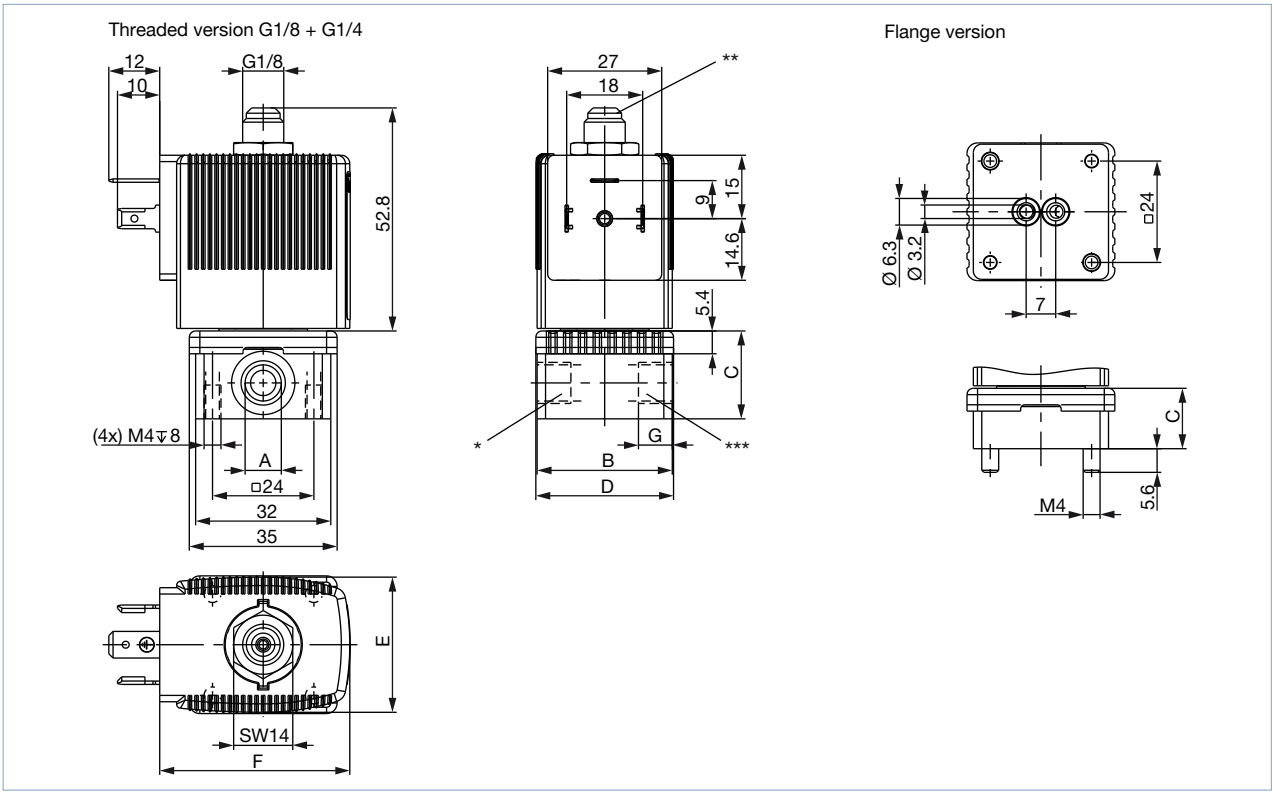

Port connection	A	B	C	D	G
	[inch]	[mm]	[mm]	[mm]	[mm]
Threaded without manual override	G ⅛	32	20.8	32.6	8
	G ¼	46	26.8	49	12
Threaded with manual override	G ⅛	32	20.8	32.6	8
	G ¼	46	26.8	49	12
Sub-base	–	32	14.3	32.6	–

Coil size	E	F
	[mm]	[mm]
5	32	45
6	40	51

PIN Assignments

For the positions marked with *, ** or *** in the drawing, the connections are marked with the letters shown in the table above, depending on the circuit function. Unused circuit functions A or B connections will be closed off with a blanking plug or cap nut.

Circuit function	Connection Type		
	*	**	***
A	P	blank off	A
B	blank off	B	P
C	P	R	A
D	R	P	B
T	P	R	A

DTS 1000011035 EN Version: Q Status: RL (released | freigegeben | validé) printed: 21.10.2021

5.2. Banjo version

Note:
Dimensions in mm

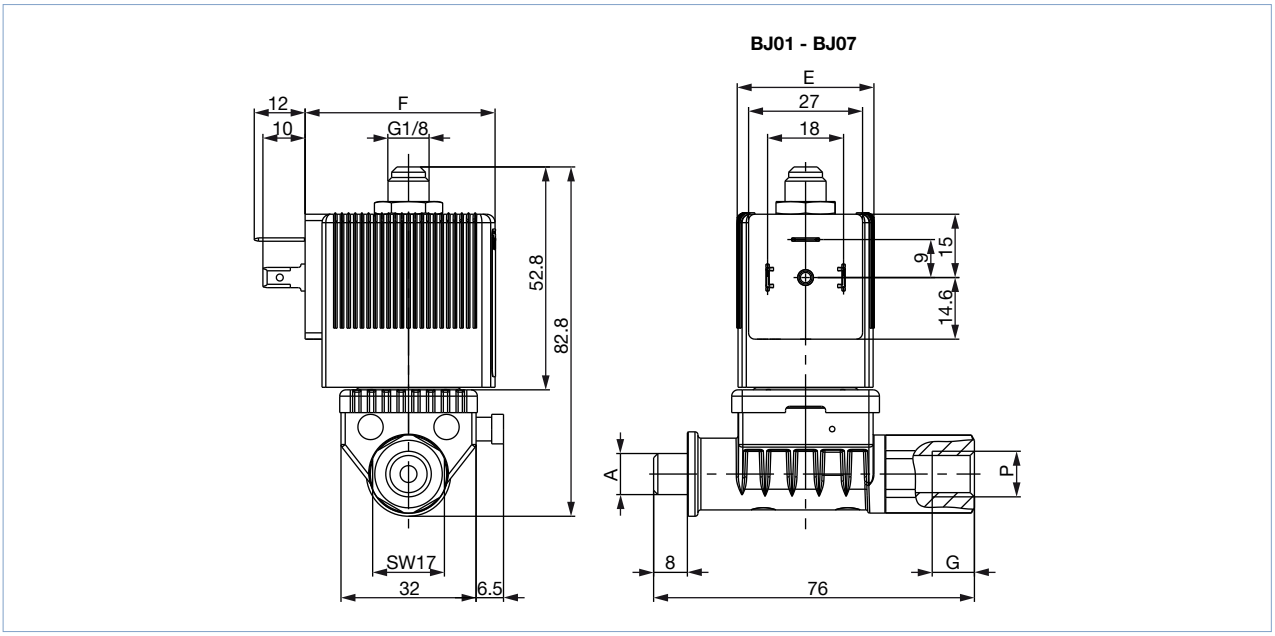

Port connection	A	P	G	Other features
	[inch]	[inch]	[mm]	
BJ01	G ⅛	G ⅛	10	–
BJ02	G ¼	G ¼	10	–
BJ03	G ⅛	NPT ¼	10	1 marking groove
BJ04	G ¼	NPT ¼	10	1 marking groove
BJ05	G ⅛	G ¼	10	–
BJ06	G ¼	G ⅛	10	–
BJ07	G ⅛	NPT ⅛	10	1 marking groove

Coil size	E	F
	[mm]	[mm]
5	32	45
6	40	51

DTS 1000011035 EN Version: Q Status: RL (released | freigegeben | validé) printed: 21.10.2021

5.3. ATEX/IECEx m cable version

Note:
Dimensions in mm

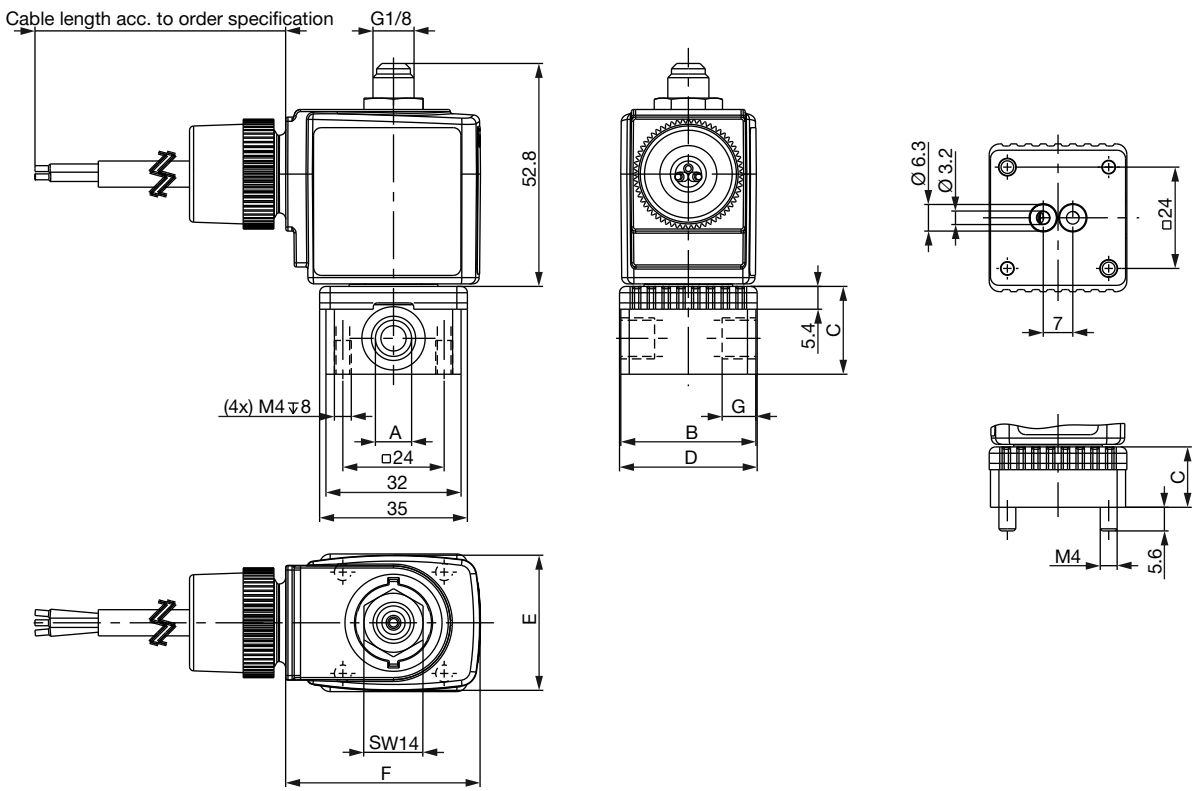

Port connection	A	B	C	D	G
	[inch]	[mm]	[mm]	[mm]	[mm]
Threaded version	G ⅛	32	20.8	32.6	8
	G ¼	46	26.8	49	12
Sub-base version	–	32	14.3	32.6	–

Coil size	E	F
	[mm]	[mm]
5	32	46
6	40	52

DTS 1000011035 EN Version: Q Status: RL (released | freigegeben | validé) printed: 21.10.2021

5.4. ATEX/IECEx m junction box version

Note:
Dimensions in mm

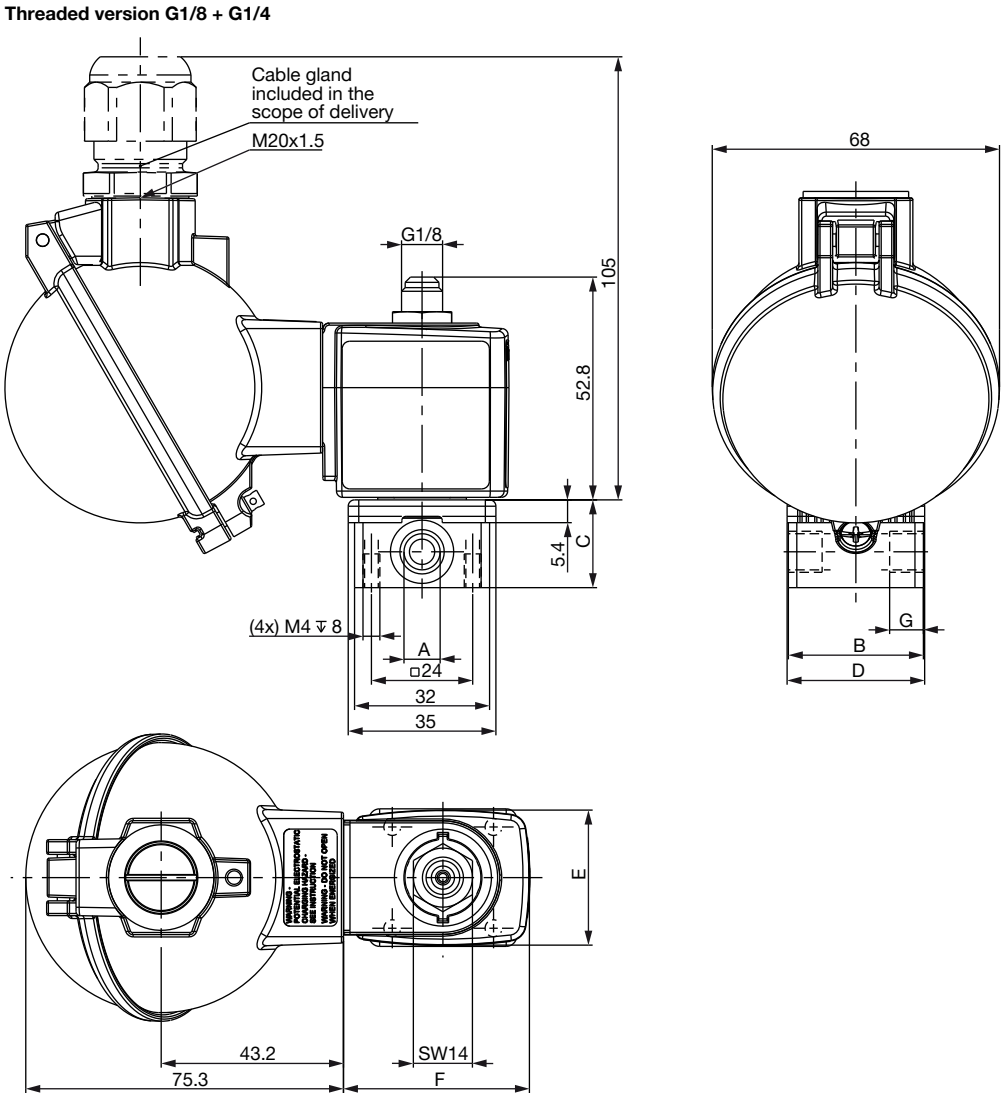

Port connection	A	B	C	D	G
	[inch]	[mm]	[mm]	[mm]	[mm]
Threaded version	G ⅛	32	20.8	32.6	8
	G ¼	46	26.8	49	12
Sub-base version	–	32	14.3	32.6	–

Coil size	E	F
	[mm]	[mm]
5	32	44
6	40	51

DTS 1000011035 EN Version: Q Status: RL (released | freigegeben | validé) printed: 21.10.2021

5.5. ATEX/IECEx ia

Note:

- Dimensions in mm
- Detailed information about electrical data see “6.3. Electrical data” on page 15.

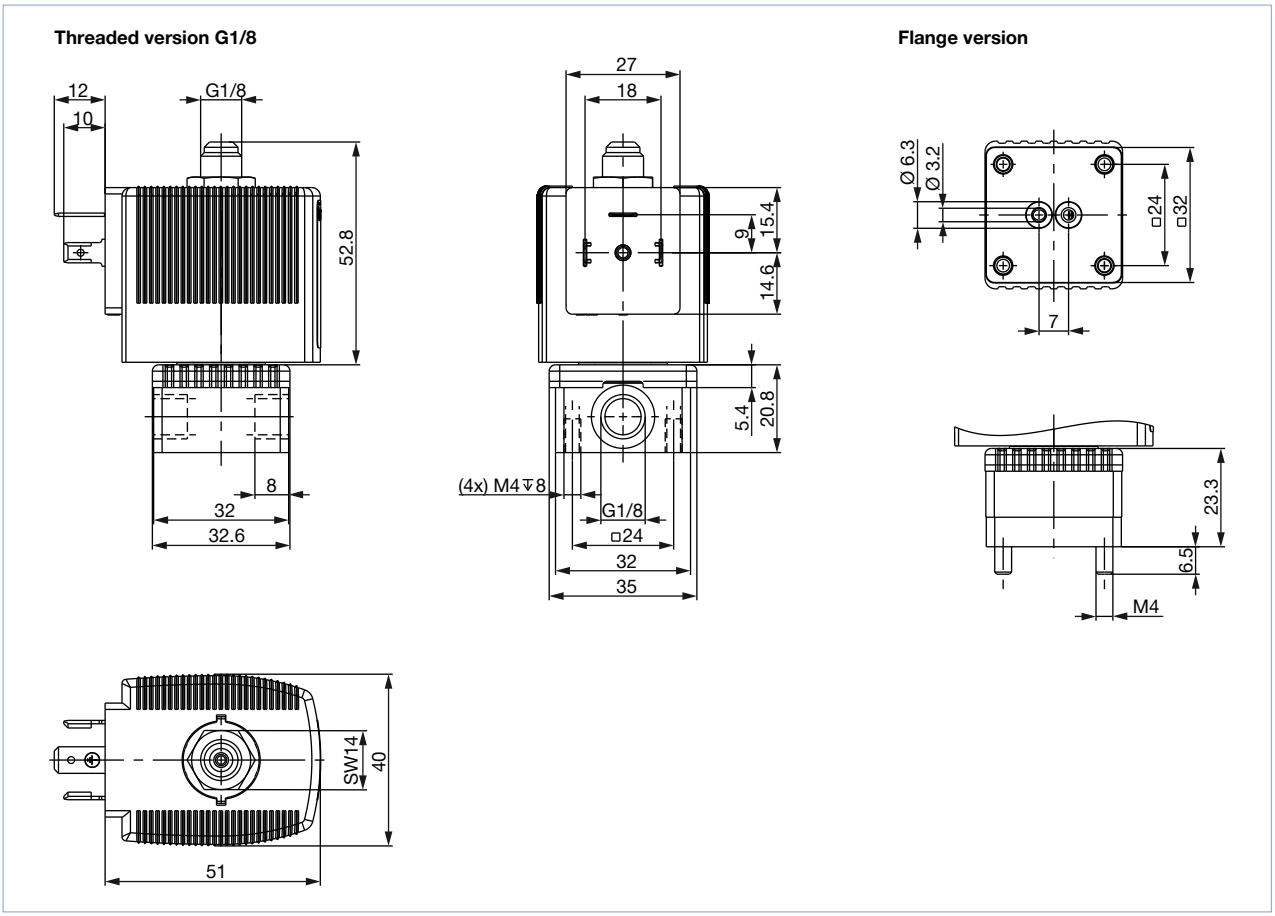

DTS 1000011035 EN Version: Q Status: RL (released | freigegeben | validé) printed: 21.10.2021

5.6. Manifold mounting

Single manifold

Note:

- Dimensions in mm
- Detailed information about installing manifolds see “Manifolds for block mounting” on page 16.

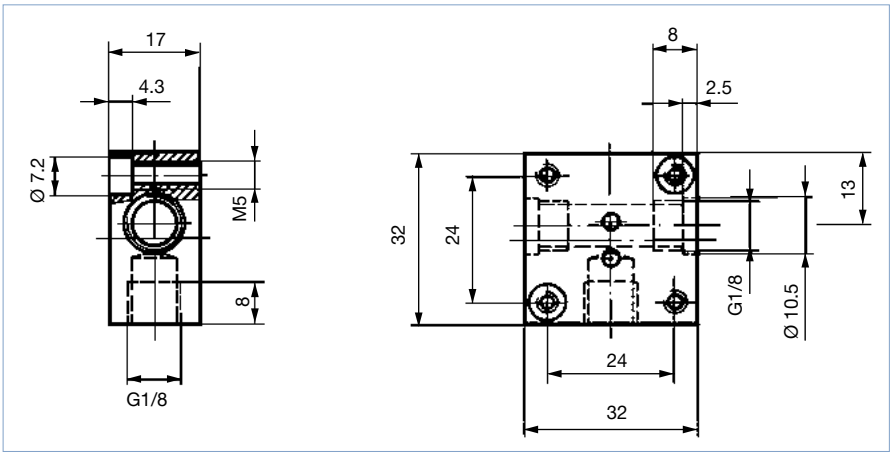

DTS 1000011035 EN Version: Q Status: RL (released | freigegeben | validé) printed: 21.10.2021

Multiple manifold

Note:
Dimensions in mm

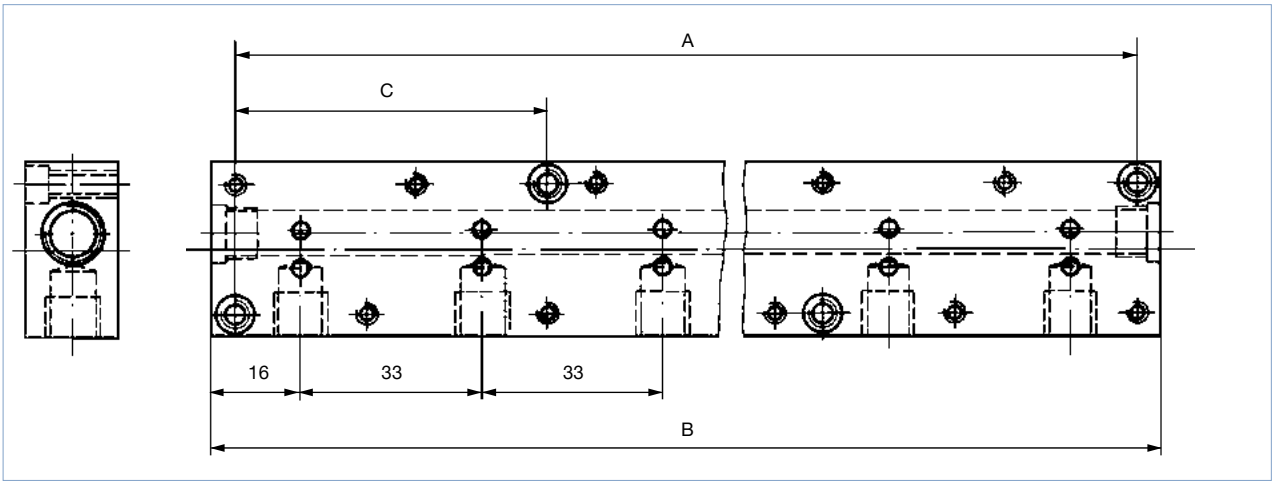

Note:
Brass or stainless steel manifolds on request

Accessory parts	Number of valve positions	Hole spacing A [mm]	Total length B [mm]	Hole spacing C [mm]	Article no.
Multiple manifold (aluminium)	2	57	65	–	005023
	3	90	98	–	005286
	4	123	131	–	005287
	5	156	164	57	005035
	6	189	197	57	005038
	8	255	263	90	005386
	10	321	329	90	005764
Single manifold (aluminium)					005020
Plug nipple with O-rings for connecting manifolds					005040
Covering plate with screws and O-ring for closing off unused valve positions					005630

6. Performance specifications

6.1. Power consumption

Note:
Response times: Measured at valve outlet at 6 bar and +20 °C. Opening: pressure build-up 0…90 %, closing: pressure relief 100…10 %

Orifice	Power consumption				Response times	
	Inrush AC	UC	Hold AC	UC	Opening	Closing
[mm]	[VA]	[W]	[VA/W]	[W]	[ms]	[ms]
1.5	24	17	8	8 / 9	10…15	15…20
2.0					10…15	15…20
2.5					15…20	10…22

DTS 1000011035 EN Version: Q Status: RL (released | freigegeben | validé) printed: 21.10.2021

6.2. Utilisation in another circuit function

The valves are equipped with different springs for specific circuit functions. When used with other circuit functions, the permissible operating pressure changes according to the following table.

Standard version		Max. operating pressure [bar] for valve application in circuit function				
DN	**Circuit function**	**A**	**B**	**C**	**D**	**T**
1.5	C	16	22	16	2	2
	D	2	2.5	2	16	2
	T	10	16	10	6	6
2.0	C	10	14	10	1	1
	D	1	1.5	1	10	1
	T	6	10	6	4	4
2.5	C	6	9	6	0.7	0.7
	D	0.7	1	0.7	6	0.7
	T	3.5	6	3.5	2.5	2.5

6.3. Electrical data

Note:
The valve is designed to operate on 24 V DC outputs through an intermediary intrinsically safe apparatus (isolating block or barrier).

Type of protection EEx ia IIC T6 acc. to PTB-No. Ex-96.D.2010

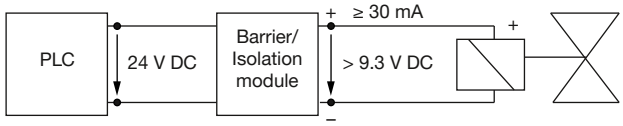

Function values for valve switching function	at +20 °C	at +55 °C
Minimum switching current	30 mA	30 mA
Nominal resistance coil	310 Ω	360 Ω
Minimum terminal voltage	9.3 V	10.8 V

Max. allowable values acc. to the certificate of conformity	
Ui	28 V
Ii	120 mA
Pi	1.1 W
Ambient temperature	+60 °C at T6
	+75 °C at T5

DTS 1000011035 EN Version: Q Status: RL (released | freigegeben | validé) printed: 21.10.2021

7. Product installation

7.1. Installation notes

Control for impulse version with polarity reversal control

Note:

- Please use only the cable plug without electrical circuitry for the impulse version!
- Pulse duration at least 50 ms

Polarity (is marked on the coil with a label)	**Features**	**Terminal connections**
– switch ON +	valve open	(+) on terminal 2 and (–) on terminal 1 (see below)
+ switch OFF –	valve closed	(+) on terminal 1 and (–) on terminal 2 (see below)



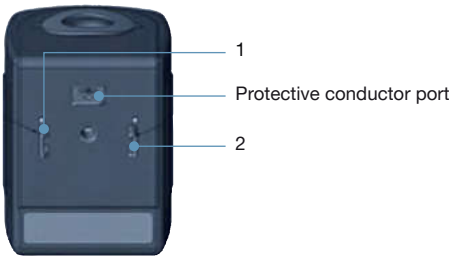

Manifolds for block mounting

Note:

- Unused, open valve ports must be closed off with covering plates (see accessories).
- Manifold should be fixed on to a rail.
- For detailed information on dimensions “5.6. Manifold mounting” on page 13.

With manifold mounting, please comply with the permissible duty cycle (5 W versions with 100 % continuous rating or 8 W version with 60 % duty cycle). The pressure port for the manifold is designated with P (R), and the outlet port with A (B). Only connect together ports with the same designation.

2/2 way valves of Type 6013 can be operated together on a manifold with 3/2 way valves of Type 6014, circuit function C (not D or T!) if the operating pressures matches according to the rating plates. The manifolds can also be expanded if the valve functions are taken into consideration. Connector nipples with O-rings are used to connect the P (R) ports.

8. Product accessories

8.1. Cable glands for ATEX/IECEx terminal box

Note:

- A cable gland in polyamide version is included in the delivery. A nickel-plated brass version can be ordered at a surcharge, see “9.4. Ordering chart accessories” on page 24.
- This special tool is not supplied with the valve (see “Cable glands for ATEX/IECEx terminal box” on page 24).

Description	**Ex approvals**		**Dimensions**	
	Certification	**Identification**		
Ex cable gland, Brass, nickel-plated, 6…13 mm	PTB 04 ATEX 1112 X, IECEx PTB 13.0027X	II 2 G Ex e IIC Gb, II 2 D Ex tb IIIC Db IP68		



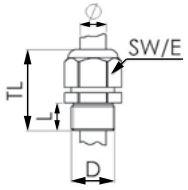

TL	29…37 mm
L	6 mm
D	20 mm
SW	24 mm
E	27 mm

DTS 1000011035 EN Version: Q Status: RL (released | freigegeben | validé) printed: 21.10.2021

Description	Ex approvals		Dimensions	
	Certification	Identification		
Ex cable gland, Polyamide, 7…13 mm 	PTB 13 ATEX 1015 X, IECEx PTB 13.0034X	II 2 G Ex e IIC Gb, II 2 D Ex tb IIIC Db IP68	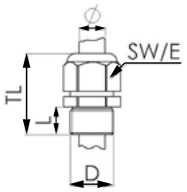	TL 36…45 mm L 10 mm D 20 mm SW 24 mm E 28 mm

8.2. Special tool to turn the junction box

Note:
This special tool is not supplied with the valve (see "9.4. Ordering chart accessories" on page 24).

Description	Components of the set
Set SC02-AC10 	• Special wrench • Service manual

9. Ordering information

9.1. Bürkert eShop – Easy ordering and quick delivery



Bürkert eShop – Easy ordering and fast delivery

You want to find your desired Bürkert product or spare part quickly and order directly? Our online shop is available for you 24/7. Sign up and enjoy all the benefits.

Order online now

9.2. Bürkert product filter



Bürkert product filter – Get quickly to the right product

You want to select products comfortably based on your technical requirements? Use the Bürkert product filter and find suitable articles for your application quickly and easily.

Try out our product filter

DTS 1000011035 EN Version: Q Status: RL (released | freigegeben | validé) printed: 21.10.2021

9.3. Ordering chart

Standard version

Note:
Delivered without cable plug (see accessories)

Circuit function	Orifice	Port connection	K_V value water[1.]	Pressure range[2.]	Coil power	Article no. per voltage / frequency		
	[mm]		[m³/h]	[bar]	[W]	024/DC	024/50	230/50
Threaded version with FKM seal, (class B)								
Brass body								
C, solenoid valve 3/2 way Direct-acting Normally closed 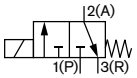	1.5	G ⅛	0.07	0…16	8	125329	125331	125332
	2.0	G ⅛	0.11	0…10	8	125333	125334	125336
		G ¼	0.11	0…10	8	125348	126138	126140
	2.5	G ⅛	0.16	0…6	8	125341	125340	125342
		G ¼	0.16	0…6	8	126142	126143	126145
D, solenoid valve 3/2 way Direct-acting Normally opened 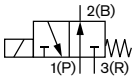	1.5	G ⅛	0.07	0…16	8	126195	126196	125355
	2.0	G ⅛	0.11	0…10	8	125357	125358	125360
		G ¼	0.11	0…10	8	126198	126199	126201
	2.5	G ⅛	0.16	0…6	8	125363	126202	126204
		G ¼	0.16	0…6	8	126205	126206	126208
T, solenoid valve 3/2 way Direct-acting Flow direction optional 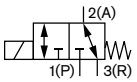	1.5	G ⅛	0.07	0…7	8	126150	126151	126153
With manual override								
C, solenoid valve 3/2 way Direct-acting Normally closed 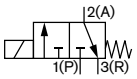	2.0	G ⅛	0.11	0…10	8	125337	125338	125339
		G ¼	0.11	0…10	8	125349	126147	126149
D, solenoid valve 3/2 way Direct-acting Normally opened 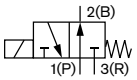	2.0	G ⅛	0.11	0…10	8	126209	125361	126211
		G ¼	0.11	0…10	8	126212	126213	126215

DTS 1000011035 EN Version: Q Status: RL (released | freigegeben | validé) printed: 21.10.2021

Circuit function	Orifice	Port connection	K_v value water[1.]	Pressure range[2.]	Coil power	Article no. per voltage / frequency		
	[mm]		[m³/h]	[bar]	[W]	024/DC	024/50	230/50
Stainless steel body								
C, solenoid valve 3/2 way Direct-acting Normally closed 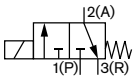	1.5	G ⅛	0.07	0…16	8	126216	126217	126219
	2.0	G ⅛	0.11	0…10	8	126220	126221	126223
	2.0	G ¼	0.11	0…10	8	126224	126225	126227
T, solenoid valve 3/2 way Direct-acting Flow direction optional 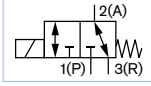	1.5	G ⅛	0.07	0…7	8	126228	126229	126231

1.) Measured at +20 °C, 1 bar[2.] pressure difference

2.) Measured as overpressure to the atmospheric pressure

Note:
Delivered without cable plug (see accessories)

Circuit function	Orifice	K_v value water[1.]	Pressure range[2.]	Coil power	Article no. per voltage / frequency		
		[m³/h]	[bar]	[W]	024/DC	024/50	230/50
Sub-base body (SFB) with FKM seal (class B)							
Brass body							
C, solenoid valve 3/2 way Direct-acting Normally closed 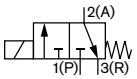	1.5	0.07	0…16	8	126154	126155	125366
	2.0	0.11	0…10	8	125367	125368	125370
D, solenoid valve 3/2 way Direct-acting Normally opened 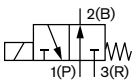	2.0	0.11	0…10	8	126161	126162	125383
With manual override							
C, solenoid valve 3/2 way Direct-acting Normally closed 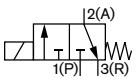	1.5	0.07	0…10	5	126403	126404	126406
	1.5	0.07	0…16	8	126157	126158	126160
	2.0	0.11	0…6	5	126407	126408	126410
	2.0	0.11	0…10	8	125371	125372	125374

DTS 1000011035 EN Version: Q Status: RL (released | freigegeben | validé) printed: 21.10.2021

Circuit function	Orifice	K_V value water[1.]	Pressure range[2.]	Coil power	Article no. per voltage / frequency		
		[m³/h]	[bar]	[W]	024/DC	024/50	230/50
Polyamide body							
C, solenoid valve 3/2 way Direct-acting Normally closed 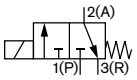	1.5	0.07	0…10	5	126390	126391	126393
With manual override							
C, solenoid valve 3/2 way Direct-acting Normally closed 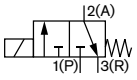	1.5	0.07	0…10	5	126396	126397	126399

1.) Measured at +20 °C, 1 bar[2.] pressure difference

2.) Measured as overpressure to the atmospheric pressure

Circuit function	Orifice	Port connection		K_V value water[1.]	Pressure range[2.]	Power consumption DC (hot/cold coil)	Article no. per voltage [V/]	
	[mm]			[m³/h]	[bar]	[W]	012/DC	024/DC
Impulse version with FKM seal and brass body (class H)								
C, solenoid valve 3/2 way Direct-acting Normally closed 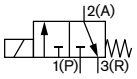	1.5	Threaded port	G ⅛	0.07	0…16	7	209280	209284
	2.0			0.11	0…10	7	209281	209285
	1.5	Sub-base {SFB}	Sub-base {SFB}	0.07	0…16	7	209278	209282
	2.0			0.11	0…10	7	209279	209283

1.) Measured at +20 °C, 1 bar[2.] pressure difference

2.) Measured as overpressure to the atmospheric pressure

Banjo version

Note:

- Please note that the cable plug has to be ordered separately, see separate datasheet for **Type 2518** ▶.
- Stainless steel banjo bolt on request

Circuit function	Pressure inlet P	Service port A (banjo bolt)	Orifice	Q_{Nn} value air	Material banjo bolt	Pressure range	Power consumption	Article no. per voltage/frequency [V/Hz]		
			[mm]	[l/min]		[bar]	[W]	024/DC	024/50	230/50
With FKM seal and manual override										
C, solenoid valve 3/2 way Direct-acting Normally closed 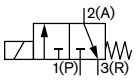	G ⅛	G ⅛	1.5	75	Brass	0…16	8	342402	389539	389541
	G ¼	G ¼	1.5	75	Brass	0…16	8	334869	389542	389543
	G ⅛	G ⅛	2.0	120	Brass	0…10	8	342403	389545	389547
	G ¼	G ¼	2.0	120	Brass	0…10	8	334870	389548	389550

x: on request

DTS 1000011035 EN Version: Q Status: RL (released | freigegeben | validé) printed: 21.10.2021

ATEX/IECEx m cable version

Note:
The maximum fluid temperature must not in any case exceed the permissible temperature class (T4 135 °C, 100 °C T5, T6 85 °C), minus 5 K.

Circuit function	Orifice [mm]	Port connection	K_v value water [m³/h]	Pressure range [bar]	Body material	Coil power [W]	Voltage/ frequency [V/Hz]	Article no. with manual override
Ex m II T4, with FKM seal and sub-base (SFB) connection with 3 m moulded cable, approved for block mounting, ambient temperature from -10 °C...+40 °C								
C, solenoid valve 3/2 way Direct-acting Normally closed 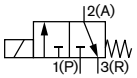	1.5	Sub-base (SFB)	0.07	0…10	PA	7	024/UC	364568
							230/UC	352017
					MS	7	024/UC	351967
							230/UC	364570
	2.0	Sub-base (SFB)	0.11	0…6	MS	7	024/UC	351981
							230/UC	351990

Circuit function	Orifice [mm]	Port connection	K_v value water [m³/h]	Pressure range [bar]	Body material	Coil power [W]	Voltage/ frequency [V/Hz]	Article no. without manual override	Article no. with manual override
Ex m II T4, with FKM seal and threaded connection with 3 m moulded cable, approved for single mounting, ambient temperature from -10 °C...+55 °C									
C, solenoid valve 3/2 way Direct-acting Normally closed 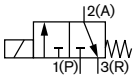	2.0	G ⅛	0.11	0…10	MS	9	024/UC	351966	351979
							230/UC	351982	352034
					VA	9	024/UC	351988	x
							230/UC	352026	x
		G ¼	0.11	0…10	MS	9	024/UC	351969	351970
							230/UC	351978	352006
					VA	9	024/UC	351963	x
							230/UC	352002	x
	2.5	G ⅛	0.16	0…6	MS	9	024/UC	x	x
							230/UC	x	x
		G ¼	0.16	0…6	MS	9	024/UC	351995	352000
							230/UC	364572	x
T, solenoid valve 3/2 way Direct-acting Flow direction optional 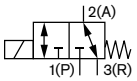	1.5	G ⅛	0.07	0…7	MS	9	024/UC	364573	x
							230/UC	x	x
					VA	9	024/UC	352009	x
							230/UC	351989	x
		G ¼	0.07	0…7	MS	9	024/UC	x	x
							230/UC	x	x
					VA	9	024/UC	351994	x
							230/UC	x	x

x: on request

DTS 1000011035 EN Version: Q Status: RL (released | freigegeben | validé) printed: 21.10.2021

ATEX/IECEx m junction box version

Note:
The maximum fluid temperature must not in any case exceed the permissible temperature class (T4 135 °C, 100 °C T5, T6 85 °C), minus 5 K.

Circuit function	Orifice [mm]	Port connection	K_v value water [m³/h]	Pressure range [bar]	Body material	Coil power [W]	Voltage/ frequency [V/Hz]	Article no. with manual override
Ex m II T4, with FKM seal and sub-base (SFB), approved for block mounting, ambient temperature from -10 °C...+40 °C								
C, solenoid valve 3/2 way Direct-acting Normally closed 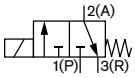	1.5	Sub-base (SFB)	0.07	0…10	PA	7	024/UC	352062
							230/UC	364576
					MS	7	024/UC	x
							230/UC	x
	2.0	Sub-base (SFB)	0.11	0…6	MS	7	024/UC	x
							230/UC	x

x: on request

Circuit function	Orifice [mm]	Port connection	K_v value water [m³/h]	Pressure range [bar]	Body material	Coil power [W]	Voltage/ frequency [V/Hz]	Article no. without manual override	Article no. with manual override
Ex m II T4, with FKM seal and threaded connection, approved for single mounting, ambient temperature form -10 °C...+55 °C									
C, solenoid valve 3/2 way Direct-acting Normally closed 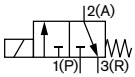	2.0	G ⅛	0.11	0…10	MS	9	024/UC	352001	351983
							230/UC	352005	364614
					VA	9	024/UC	351998	x
							230/UC	364581	x
		G ¼	0.11	0…10	MS	9	024/UC	351992	351980
							230/UC	364587	352071
					VA	9	024/UC	352067	x
							230/UC	352041	x
	2.5	G ⅛	0.16	0…6	MS	9	024/UC	364595	x
							230/UC	364598	x
		G ¼	0.16	0…6	MS	9	024/UC	364600	364615
							230/UC	364603	364618
T, solenoid valve 3/2 way Direct-acting Flow direction optional 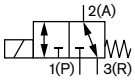	1.5	G ⅛	0.07	0…7	MS	9	024/UC	364606	x
							230/UC	x	x
					VA	9	024/UC	x	x
							230/UC	x	x
		G ¼	0.07	0…7	MS	9	024/UC	x	x
							230/UC	x	x
					VA	9	024/UC	364610	x
							230/UC	364611	x

x: on request

DTS 1000011035 EN Version: Q Status: RL (released | freigegeben | validé) printed: 21.10.2021

ATEX/IECEx ia version

Note:
The maximum fluid temperature must not in any case exceed the permissible temperature class (T4 135 °C, 100 °C T5, T6 85 °C), minus 5 K.

Circuit function	Orifice [mm]	Q_{Nn} value air [l/min]	Pressure range [bar]	Body material	Port connection	Article no.
Ex ia II T6 with FKM seal only for approved single mounting, cable plug acc. to DIN EN 175 301-803 Form A, ambient temperature from -10 °C...+60 °C for T6, -10...-75 °C for T5						
C, solenoid valve 3/2 way Direct-acting Normally closed 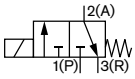	0.9	30	Vac. to 10	Stainless steel	Bürkert sub-base (SFB)	20003982
					G ⅛	394532
				Brass	Bürkert sub-base (SFB)	394531
					G ⅛	394530

Further versions on request	
Additional Orifice: 1.2 mm, 3.0 mm	**Process connection** Banjo bolt
Approval UL, CSA	**Voltage** Non-standard voltages
Material Epoxy coil according to Form A Seal material EPDM	

DTS 1000011035 EN Version: Q Status: RL (released | freigegeben | validé) printed: 21.10.2021

9.4. Ordering chart accessories

Cable plug Type 2518, Form A according to DIN EN 175301-803

Note:
Further versions see data sheet **Type 2518** ▶.

Cable plug	Dimensions	Version	Voltage	Article no.
	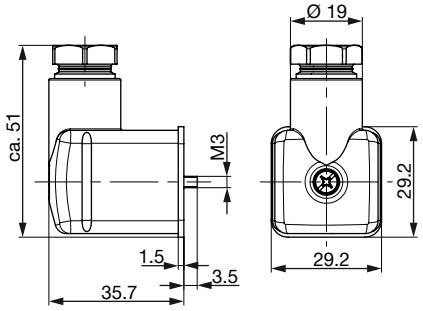	Without circuitry (AC/DC)	0…250 V AC/DC	314802
		With LED (AC/DC)	12…24 V AC/DC	314812
		With LED and varistor (AC/DC)	12…24 V AC/DC	314820
		With rectifier, LED and varistor	12…24 V AC/DC	314816

Cable plug Type 2513, form A acc. to DIN EN 175301 - 803

Note:

- Cable plug Type 2513 meets the requirements of ATEX category 3 GD.
- For more information on the cable plug, see data sheet **Type 2513** ▶.

Cable plug	Circuit diagram	Cable length [mm]	Article no.
	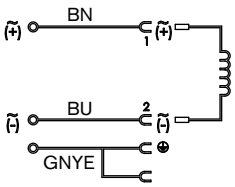	12000	260893
		5000	260892
		3000	260891
		300	260890

Cable glands for ATEX/IECEx terminal box

Note:

- A cable gland in polyamide version is included in the delivery. A nickel-plated brass version can be ordered at surcharge.
- For more information on Ex cable glands, see "8.1. Cable glands for ATEX/IECEx terminal box" on page 16.

Description	Article no.
Ex cable gland, brass, nickel-plated, 6…13 mm[1.)]	773278
Ex cable gland, polyamide, 7…13 mm[1.)]	773277
Set SC02-AC10: Special wrench[2.)] incl. service manual	293488

1.) Cable diameter

2.) Not included in the scope of delivery of the valve

Manifold mounting

Note:
The ordering chart for the sub-plates can be found in chapter "5.6. Manifold mounting" on page 13.

DTS 1000011035 EN Version: Q Status: RL (released | freigegeben | validé) printed: 21.10.2021

Bürkert – Close to You

For up-to-date addresses
please visit us at
www.burkert.com



DTS 1000011035 EN Version: Q Status: RL (released | freigegeben | validé) printed: 21.10.2021

Credits, © and concept: Christian Bürkert GmbH & Co. KG | Photographs: Marc Eggimann Fotografie - 4051 Basel | Scanner GmbH - Werbeagentur Künzelsau - 74653 Künzelsau