OMRON

Tactile Switch

B3F

Through-hole-mounting Switches in a Wide Range of Models: 6 × 6 mm, 12 × 12 mm, Side-operated Models, Gold-plated Contacts, and Radial Tape

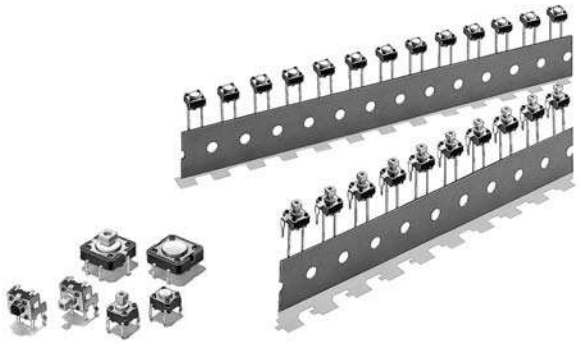

- Extended mechanical/electrical durability: 10 x 10^6 operations for 12 x 12 mm type and 1 x 10^6 operations for the 6 x 6 mm type
- Taped radial type, vertical type and high force types are available.
- Gold plated models available for increased contact reliability, resistance to corrosive gas and insulation failure prevention for ion migration in harsh environments
- B32-series Key Tops mount to models with projected plungers.

RoHS Compliant

■ List of Models

6 × 6 mm Models

Type	Contact material	Plunger	Height	Operating force (OF)	Plunger color	Bags			
						Without ground terminal	Minimum packing unit	With ground terminal	Minimum packing unit
Standard: B3F-1000 Series	Silver plated	Flat type 	4.3 mm	0.98 N {100 gf}	Ivory	B3F-1000	100 pcs	B3F-1100	100 pcs
				1.47 N {150 gf}	Yellow	B3F-1002		B3F-1102	
				2.55 N {260 gf}	Orange	B3F-1005		B3F-1105	
				4.9 N {500 gf}	Red	B3F-1006		---	
			5.0 mm	0.98 N {100 gf}	Black	B3F-1020		B3F-1120	
				1.47 N {150 gf}	Gray	B3F-1022		B3F-1122	
				2.55 N {260 gf}	Pink	B3F-1025		B3F-1125	
				4.9 N {500 gf}	Blue	B3F-1026		---	
			5.0 mm (7.5-mm pitch)	0.98 N {100 gf}	Black	---		B3F-1110	
			7.0 mm	0.98 N {100 gf}	Black	B3F-1060		---	
				1.47 N {150 gf}	Yellow	B3F-1062		---	
			9.5 mm	0.98 N {100 gf}	Black	B3F-1070		---	
				1.47 N {150 gf}	Yellow	B3F-1072		---	
				2.55 N {260 gf}	Orange	B3F-1075		---	
		Projected type 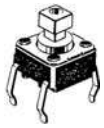	7.3 mm	0.98 N {100 gf}	Ivory	B3F-1050		B3F-1150	
				1.47 N {150 gf}	Yellow	B3F-1052		B3F-1152	
				2.55 N {260 gf}	Orange	B3F-1055		B3F-1155	
				4.9 N {500 gf}	Red	B3F-1056		---	

Type	Contact material	Plunger	Height	Operating force (OF)	Plunger color	Bags			
						Without ground terminal	Minimum packing unit	With ground terminal	Minimum packing unit
Side-operated: B3F-3000 Series	Silver plated	Flat type 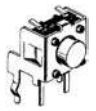	3.15 mm	0.98 N {100 gf}	Ivory	---	100 pcs	B3F-3100	100 pcs
				1.47 N {150 gf}	Yellow	---		B3F-3102	
				2.55 N {260 gf}	Orange	---		B3F-3105	
			3.85 mm	0.98 N {100 gf}	Black	---		B3F-3120	
				1.47 N {150 gf}	Gray	---		B3F-3122	
				2.55 N {260 gf}	Pink	---		B3F-3125	
		Projected type 	6.15 mm	0.98 N {100 gf}	Ivory	---		B3F-3150	
				1.47 N {150 gf}	Yellow	---		B3F-3152	
				2.55 N {260 gf}	Orange	---		B3F-3155	
High-reliability gold-plated: B3F-1000-G Series	Gold plated	Flat type 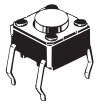	4.3 mm	1.76 N {180 gf}	Yellow	B3F-1002-G		B3F-1102-G	
			5.0 mm		Gray	B3F-1022-G		B3F-1122-G	
			7.0 mm		Yellow	B3F-1062-G (see note)		---	
			9.5 mm		Yellow	B3F-1072-G (see note)		---	
Side-operated with highly reliable gold-plated: B3F-3000-G Series		Projected type 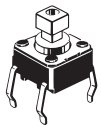	7.3 mm		Yellow	B3F-1052-G		---	
		Flat type 	3.85 mm		Gray	---		B3F-3122-G (see note)	

Note: Bulk Packaged, 100 Switches per bag. Order in multiples of the package quantity.

12 × 12 mm Models

Type	Contact material	Plunger (or LED color)	Height	Operating force (OF)	Plunger color	Bags			
						Without ground terminal	Minimum packing unit	With ground terminal	Minimum packing unit
Standard: B3F-4000 Series	Silver plated	Flat type	4.3 mm	1.27 N {130 gf}	Ivory	B3F-4000	100 pcs	B3F-4100	100 pcs
				2.55 N {260 gf}	Yellow	B3F-4005		B3F-4105	
		Projected type	7.3 mm	1.27 N {130 gf}	Ivory	B3F-4050		B3F-4150	
				2.55 N {260 gf}	Yellow	B3F-4055		B3F-4155	
Long durability: B3F-5000 Series	Silver plated	Flat type	4.3 mm	1.27 N {130 gf}	Blue	B3F-5000		B3F-5100	
		Projected type	7.3 mm		Blue	B3F-5050		B3F-5150	
High reliability gold-plated: B3F-5001 Series	Gold plated	Flat type	4.3 mm	1.27 N {130 gf}	Blue	B3F-5001		B3F-5101	
		Projected type	7.3 mm		Blue	B3F-5051		B3F-5151	

Note: Bulk Packaged, 100 switches per bag. Order in multiples of the package quantity.

6 × 6 mm Radial Models (Taping Specifications)

Type	Contact material	Plunger	Height	Operating force (OF)	Plunger color	Taped Radial			
						Without ground terminal	Minimum packing unit	With ground terminal	Minimum packing unit
Taped Radial: B3F-6000 Series	Silver plated	Flat type	4.3 mm	0.98 N {100 gf}	Ivory	B3F-6000	1,000 pcs	B3F-6100	1,000 pcs
				1.47 N {150 gf}	Yellow	B3F-6002		B3F-6102	
			5.0 mm	0.98 N {100 gf}	Black	B3F-6020		B3F-6120	
				1.47 N {150 gf}	Gray	B3F-6022		B3F-6122	
		Projected type	7.3 mm	0.98 N {100 gf}	Ivory	B3F-6050		B3F-6150	
				1.47 N {150 gf}	Yellow	B3F-6052		B3F-6152	

Note: The switches are tape packaged in units of 1,000 per package. Order in multiples of the package size. Switches are not sold individually.

■ Ratings/Characteristics

Rating (resistive load)	1 to 50 mA, 3 to 24 VDC (B3F-G: 100 μA to 50 mA, 3 to 24 VDC)
Minimum applicable load (reference value)	10 μA at 1 VDC (resistive load)
Ambient operating temperature	-25°C to +70°C at 60%RH max. (with no icing or condensation)
Ambient operating humidity	35% to 85% (at +5 to +35°C)
Contact form	SPST-NO
Contact resistance (initial value)	100 mΩ max.
Insulation resistance	100 MΩ min. (at 250 VDC with insulation tester)
Dielectric strength	500 VAC, 50/60 Hz for 1 min
Bounce time	5 ms max.
Vibration resistance	Malfunction: 10 to 55 Hz, 1.5 mm double amplitude
Shock resistance	Destruction: 1,000 m/s^2 {approx. 100G} max. Malfunction: 100 m/s^2 {approx. 10G} max.
Durability	B3F-1000, B3F-3000, B3F-6000: 1,000,000 operations min (OF: 0.98 N {100 gf}) (B3F-1070: 500,000 operations min) 300,000 operations min (OF: 1.47 N {150 gf}) 100,000 operations min (OF: 2.55 N {260 gf}) 50,000 operations min (OF: 4.9 N {500 gf}) B3F-4000: 3,000,000 operations min (OF: 1.27 N {130 gf}) 1,000,000 operations min (OF: 2.55 N {260 gf}) B3F-5000/5001: 10,000,000 operations min. B3F-G: 300,000 operations min.
Weight	6 × 6 mm models: approx. 0.25 g 12 × 12 mm models (standard types): approx. 0.85 g Radial models: approx. 0.25 g
Degree of protection	IEC IP00
Washing	Not possible

■ Operating Characteristics

6 × 6 mm Models

Item \ Operating force (OF)	B3F-1000, B3F-3000, B3F-6000				B3F-G
	0.98 N	**1.47 N**	**2.55 N**	**4.9 N**	**1.76 N**
	B3F-1□□0 B3F-3□□0 B3F-6□□0	**B3F-1□□2 B3F-3□□2 B3F-6□□2**	**B3F-1□□5 B3F-3□□5**	**B3F-10□6**	**B3F-1□□2-G B3F-3□□2-G**
Operating force (OF)	0.98±0.29 N {100±30 gf}	1.47±0.49 N {150±50 gf}	2.55±0.69 N {260±70 gf}	4.9±1.47 N {500±150 gf}	1.76±0.49 N {180±50 gf}
Releasing force (RF)	0.2 N {20 gf} min.	0.49 N {50 gf}min.	0.49 N {50 gf}min.	0.7 N {70 gf} min.	0.49 N {50 gf}min.
Pretravel (PT)	$0.25^{+0.2}_{-0.1}$ mm				$0.25^{+0.2}_{-0.1}$ mm

12 × 12 mm Models

Item \ Operating force (OF)	B3F-4000, B3F-5000, B3F-5001	
	1.27 N	**2.55 N**
	B3F-4□□0 B3F-5□□0 B3F-5□□1	**B3F-4□□5**
Operating force (OF)	1.27±0.49 N {130±50 gf}	2.55±0.69 N {260±70 gf}
Releasing force (RF)	0.29 N {30 gf} min.	0.49 N {50 gf} min.
Pretravel (PT)	$0.3^{+0.2}_{-0.1}$ mm	

■ Dimensions (Unit: mm)

Note: The numbers used for terminals in the following graphics are indicated in the "Bottom View" diagram below. In this diagram, the Switch is rotated so that the terminals are on the right and left-hand sides, and the OMRON logo appears the right way up. (Except Side-operated and Radial Models)



6 × 6 mm Models

Standard, Flat Plunger Type (without Ground Terminal)

B3F-1000, B3F-1002, B3F-1005, B3F-1006
B3F-1020 (See note.), B3F-1022 (See note.),
B3F-1025 (See note.), B3F-1026 (See note.)
B3F-1002-G, B3F-1022-G (See note.)

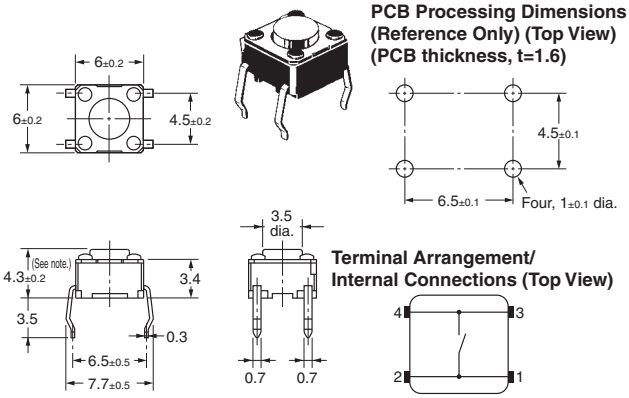

Note: The height of B3F-1020, B3F-1022, B3F-1025, and B3F-1026 is 5±0.2 mm.

Standard, Flat Plunger Type (with Ground Terminal)

B3F-1100, B3F-1102, B3F-1105
B3F-1120 (See note.), B3F-1122 (See note.)
B3F-1125 (See note.)
B3F-1102-G, B3F-1122-G (See note.)

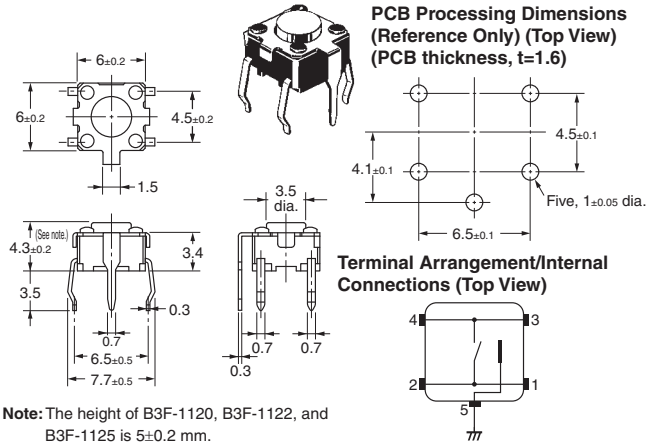

Note: The height of B3F-1120, B3F-1122, and B3F-1125 is 5±0.2 mm.

Standard, Flat Plunger Type (with Ground Terminal, Pitch: 7.5 mm)

B3F-1110

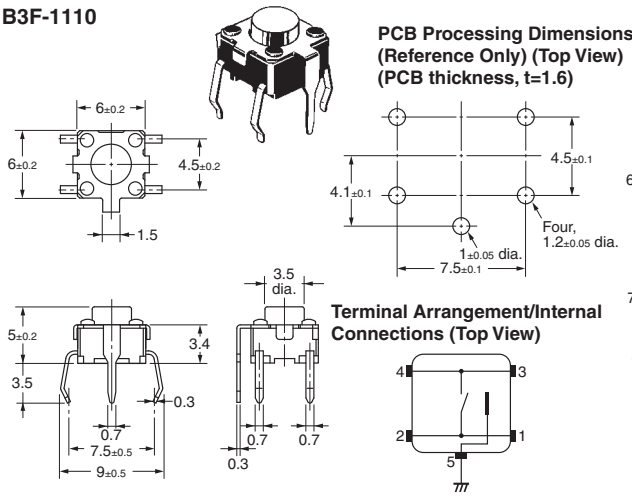

Standard, Flat Plunger Type (without Ground Terminal)

B3F-1060, B3F-1062, B3F-1062-G

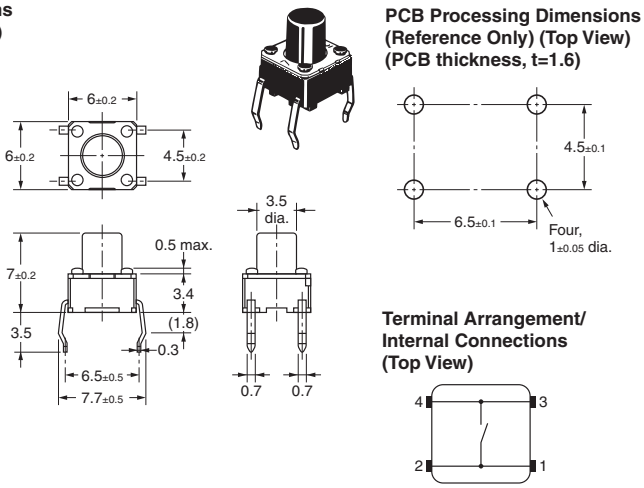

Note: Unless otherwise specified, a tolerance of ±0.4 mm applies to all dimensions. No terminal numbers are indicated on the Switches.

Standard, Flat Plunger Type (without Ground Terminal)

B3F-1070, B3F-1072, B3F-1075, B3F-1072-G

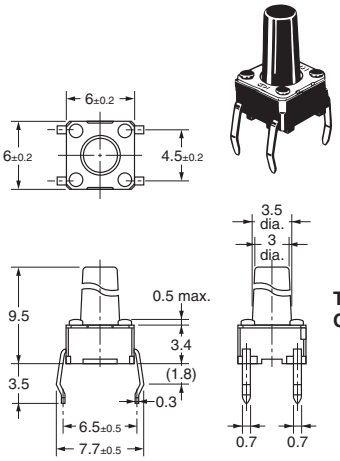

PCB Processing Dimensions (Reference Only) (Top View) (PCB thickness, t=1.6)

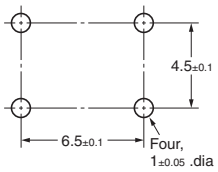

Terminal Arrangement/Internal Connections (Top View)

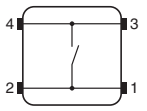

Standard, Projected Plunger Type (without Ground Terminal)

B3F-1050, B3F-1052
B3F-1055, B3F-1056
B3F-1052-G

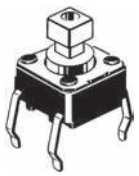

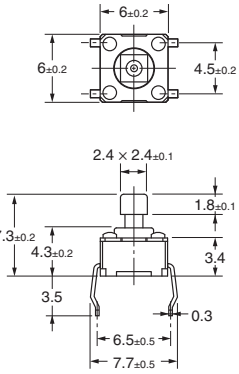

PCB Processing Dimensions (Reference Only) (Top View) (PCB thickness, t=1.6)

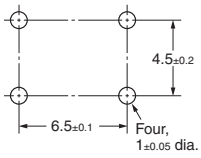

Terminal Arrangement/Internal Connections (Top View)

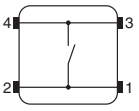

Standard, Projected Plunger Type (with Ground Terminal)

B3F-1150, B3F-1152, B3F-1155

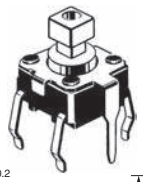

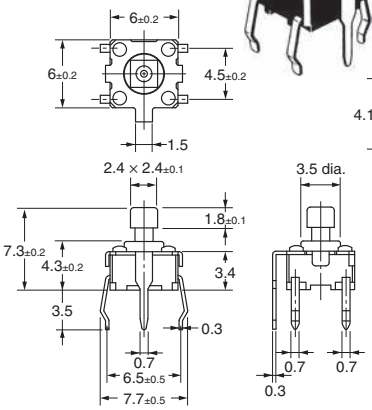

PCB Processing Dimensions (Reference Only) (Top View) (PCB thickness, t=1.6)

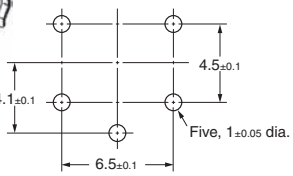

Terminal Arrangement/ Internal Connections (Top View)

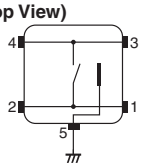

Side-operated, Flat Plunger Type

B3F-3100, B3F-3102, B3F-3105

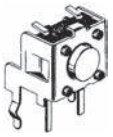

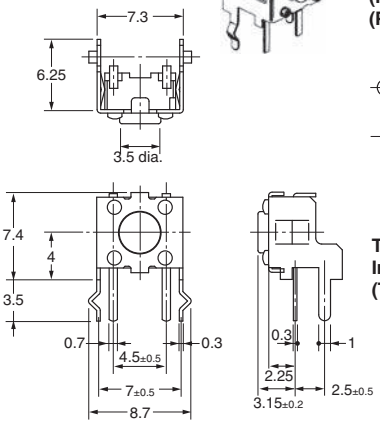

PCB Processing Dimensions (Reference Only) (Top View) (PCB thickness, t=1.6)

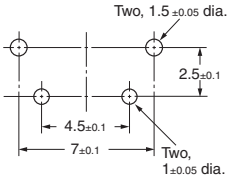

Terminal Arrangement/ Internal Connections (Top View)

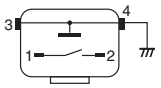

Side-operated, Flat Plunger Type (Height: 3.85 mm)

B3F-3120, B3F-3122, B3F-3125, B3F-3122-G

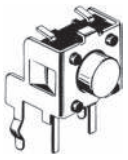

PCB Processing Dimensions (Reference Only) (Top View) (PCB thickness, t=1.6)

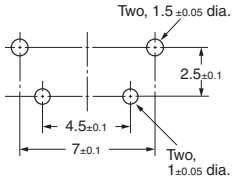

Terminal Arrangement/ Internal Connections (Top View)

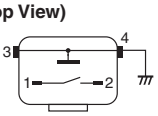

Side-operated, Projected Plunger Type

B3F-3150, B3F-3152, B3F-3155

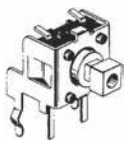

PCB Processing Dimensions (Reference Only) (Top View) (PCB thickness, t=1.6)

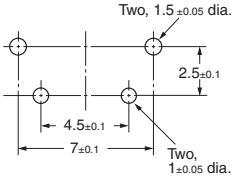

Terminal Arrangement/ Internal Connections (Top View)

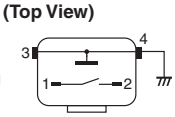

Note: Unless otherwise specified, a tolerance of ±0.4 mm applies to all dimensions. No terminal numbers are indicated on the Switches.

12 × 12 mm Models

Standard, Long-durability, and High-reliability Models Flat Plunger Type (without Ground Terminal)

B3F-4000, B3F-4005, B3F-5000, B3F-5001

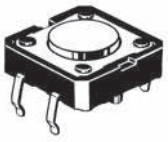

PCB Processing Dimensions (Reference Only) (Top View) (PCB thickness, t=1.6)

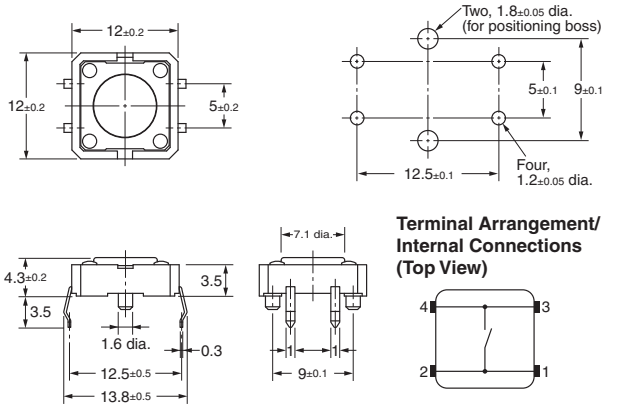

Standard, Long-durability, and High-reliability Models Flat Plunger Type (with Ground Terminal)

B3F-4100, B3F-4105, B3F-5100, B3F-5101

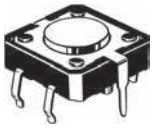

PCB Processing Dimensions (Reference Only) (Top View) (PCB thickness, t=1.6)

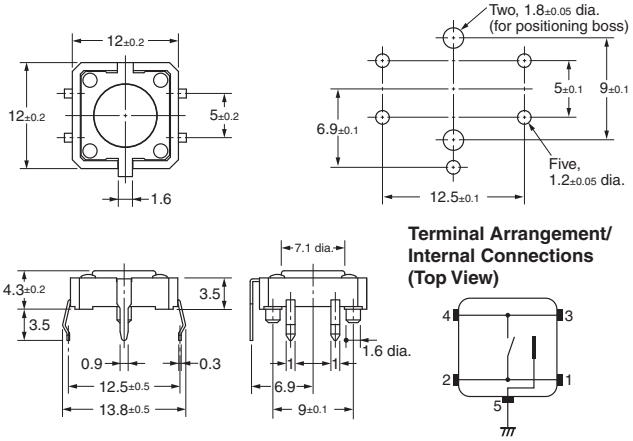

Standard, Long-durability, and High-reliability Models Projected Plunger Type (without Ground Terminal)

B3F-4050, B3F-4055, B3F-5050, B3F-5051

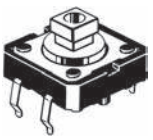

PCB Processing Dimensions (Reference Only) (Top View) (PCB thickness, t=1.6)

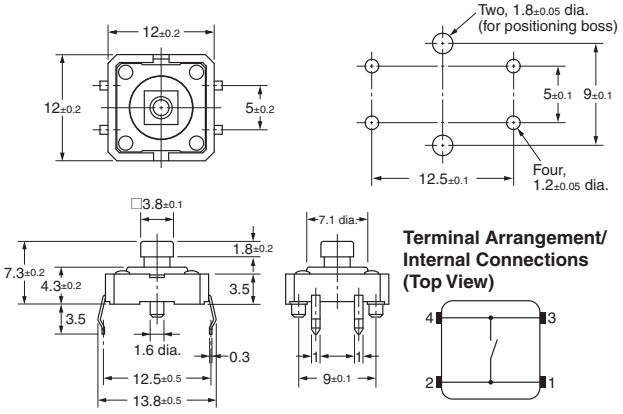

Standard, Long-durability, and High-reliability Models Projected Plunger Type (with Ground Terminal)

B3F-4150, B3F-4155, B3F-5150, B3F-5151



PCB Processing Dimensions (Reference Only) (Top View) (PCB thickness, t=1.6)

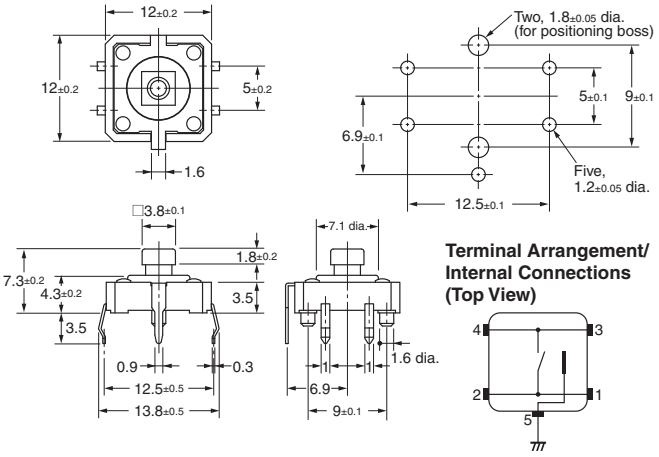

Note: Unless otherwise specified, a tolerance of ±0.4 mm applies to all dimensions.

Note: The numbers used for terminals in the following graphics are indicated in the "Bottom View" diagram below. In this diagram, the Switch is rotated so that the terminals are on the right and left-hand sides, and the OMRON logo appears the right way up.



(Bottom View)

6 mm × 6 mm Radial Types (Taping Specifications): Sold in Units of 1,000 Switches

Flat Plunger Type (without Ground Terminal) B3F-6000, B3F-6002

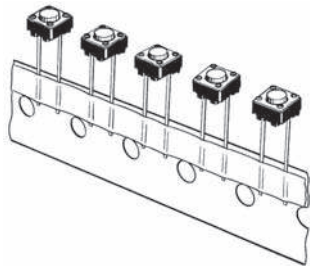

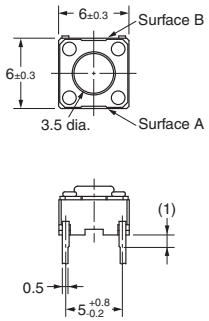

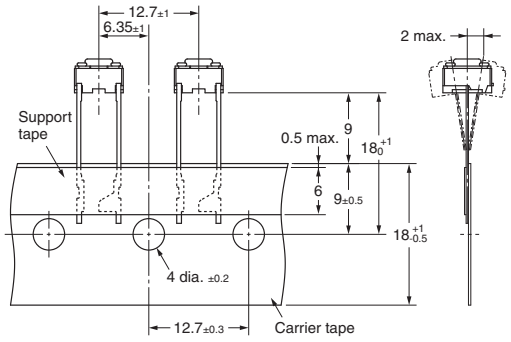

Note: The tape is random between surface A and surface B.

PCB Processing Dimensions (Reference Only) (Top View) (PCB thickness, t=1.6)

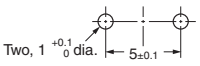

Terminal Arrangement /Internal Connections (Top View)

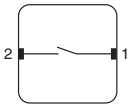

Flat Plunger Type (with Ground Terminal) B3F-6100, B3F-6102

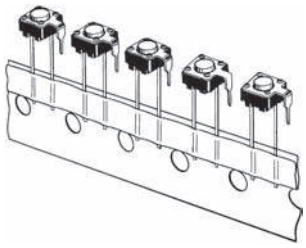

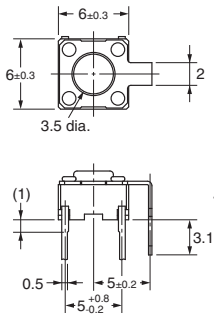

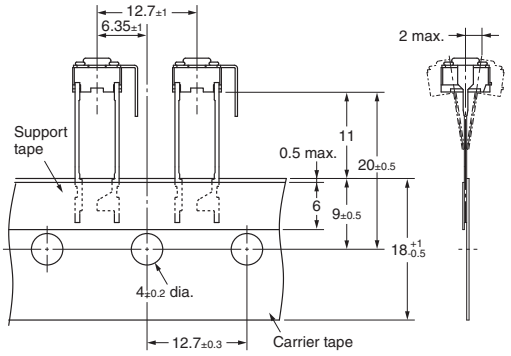

PCB Processing Dimensions (Reference Only) (Top View) (PCB thickness, t=1.6)

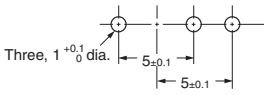

Terminal Arrangement /Internal Connections (Top View)

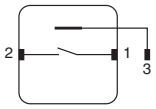

Flat Plunger Type (without Ground Terminal) B3F-6020, B3F-6022

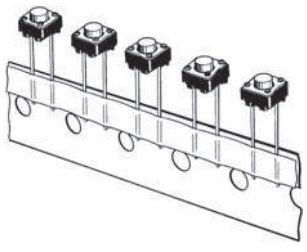

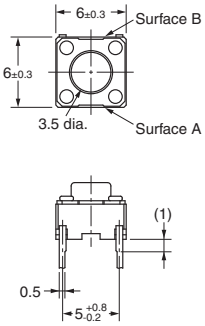

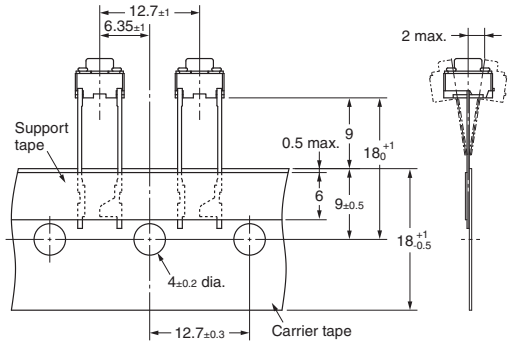

Note: The tape is random between surface A and surface B.

PCB Processing Dimensions (Reference Only) (Top View) (PCB thickness, t=1.6)

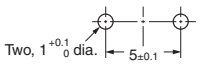

Terminal Arrangement /Internal Connections (Top View)

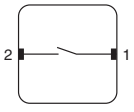

Note: Unless otherwise specified, a tolerance of ±0.4 mm applies to all dimensions. No terminal numbers are indicated on the Switches.

Flat Plunger Type (with Ground Terminal) B3F-6120, B3F-6122

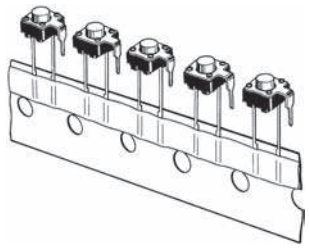

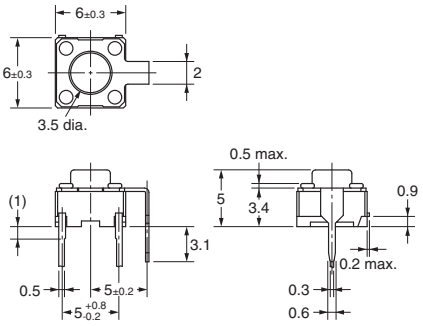

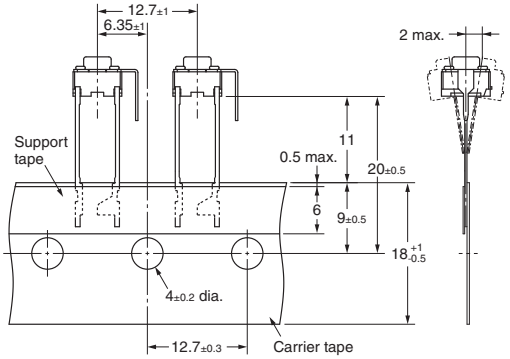

PCB Processing Dimensions (Reference Only) (Top View) (PCB thickness, t=1.6)

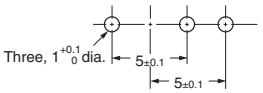

Terminal Arrangement /Internal Connections (Top View)

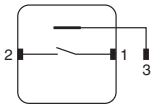

Projected Plunger Type (without Ground Terminal) B3F-6050, B3F-6052

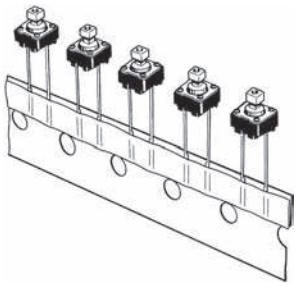

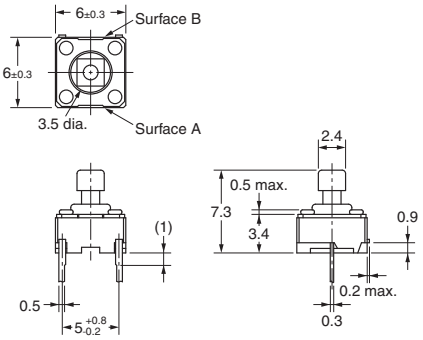

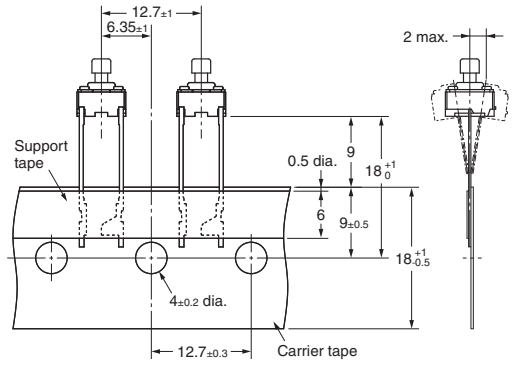

PCB Processing Dimensions (Reference Only) (Top View) (PCB thickness, t=1.6)

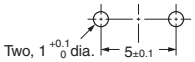

Terminal Arrang ement /Internal Connections (Top View)

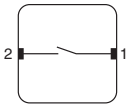

Note: The tape is random between surface A and surface B.

Projected Plunger Type (with Ground Terminal) B3F-6150, B3F-6152

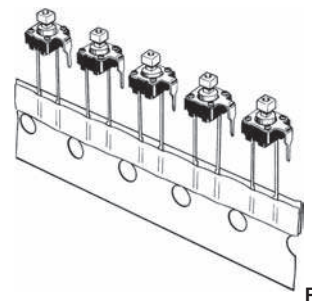

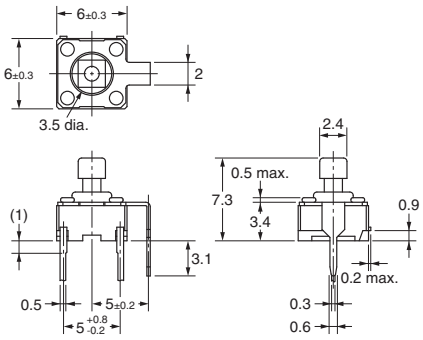

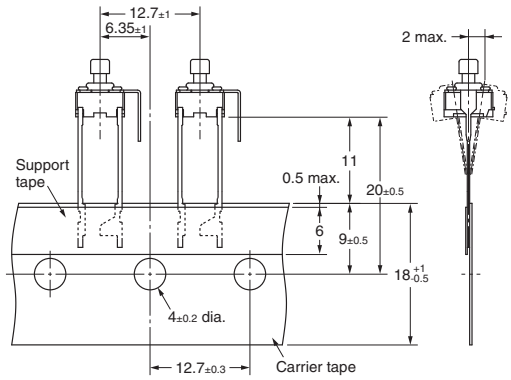

PCB Processing Dimensions (Reference Only) (Top View) (PCB thickness, t=1.6)

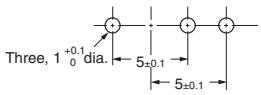

Terminal Arrangement /Internal Connections (Top View)

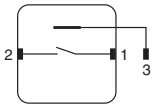

Note: Unless otherwise specified, a tolerance of ±0.4 mm applies to all dimensions. No terminal numbers are indicated on the Switches.

■ Key Tops

B32-series Key Tops are available for projected plungers. Refer to the Datasheet of B32 for details.

■ Precautions

Be sure to read the safety precautions common to all Tactile Switches for correct use.

- Application examples provided in this document are for reference only. In actual applications, confirm equipment functions and safety before using the product.
- Consult your OMRON representative before using the product under conditions which are not described in the manual or applying the product to nuclear control systems, railroad systems, aviation systems, vehicles, combustion systems, medical equipment, amusement machines, safety equipment, and other systems or equipment that may have a serious influence on lives and property if used improperly. Make sure that the ratings and performance characteristics of the product provide a margin of safety for the system or equipment, and be sure to provide the system or equipment with double safety mechanisms.

Note: Do not use this document to operate the Unit.

OMRON Corporation
Electronic and Mechanical Components Company **Contact: www.omron.com/ecb**

Cat. No. A070-E1-08
1014(0207)(O)