Mitsubishi Electric Domestic, Mr.Slim and City Multi to BACnet/IP & MS/TP Interface

Item number: INBACMIT001I000

The Mitsubishi Electric-BACnet interface allows full bidirectional communication between Mitsubishi Electric domestic, Mr. Slim, and City Multi air conditioner units and BACnet/IP or MS/TP networks. It enables BACnet communication via polling or subscription requests (COV), making the indoor unit available through independent BACnet objects.



Mitsubishi Electric Domestic to BACnet/IP & MS/TP - 1 indoor unit

Features and benefits

- **Support for BACnet/IP and BACnet MS/TP**
  BACnet/IP (via Ethernet) or BACnet MS/TP (via EIA-485) connection options are supported.
- **IP settings available via a web interface**
  A configuration tool is available via a web interface with IP settings and more information.
- **Occupancy function to allow energy savings**
  Occupancy function that helps reduce costs, as HVAC systems are one of the main energy consumers.
- **AC unit control by remote and BACnet/IP or MS/TP**
  The AC unit can simultaneously be controlled via BACnet/IP or MS/TP and its own remote controller.
- **Configuration from onboard DIP switches**
  The interface configuration is carried out directly through its onboard DIP switches.
- **AC unit data served as fixed BACnet Objects**
  Air conditioning unit properties and functionalities are abstracted into fixed BACnet Objects.
- **Total unit control and monitoring from BACnet**
  Through internal variables, running hours counter (for maintenance purposes), and error indication.
- **No external power required**
  The interface is powered directly from the AC unit, so no external power supply is required.

Mitsubishi Electric Domestic, Mr.Slim and City Multi to BACnet/IP & MS/TP Interface



General

Net Width (mm)	53
Net Height (mm)	58
Net Depth (mm)	93
Net Weight (g)	180
Packed Width (mm)	15
Packed Height (mm)	9
Packed Depth (mm)	10
Packed Weight (g)	240
Operating Temperature °C Min	0
Operating Temperature °C Max	40
Storage Temperature °C Min	0
Storage Temperature °C Max	40
Power Consumption (W)	0.72
Input Voltage (V)	12 VDC
Power Connector	Other
Configuration	Web Server
Capacity	1 Indoor unit.
Installation Conditions	This gateway is designed to be mounted inside an enclosure. If the unit is mounted outside an enclosure, precautions should always be taken to prevent electrostatic discharge to the unit. When working inside an enclosure (e.g., making adjustments, setting switches, etc.), typical anti-static precautions should always be followed before touching the unit.
AC Model Compatibility	Mitsubishi Electric Air Conditioning

Mitsubishi Electric Domestic, Mr.Slim and City Multi to BACnet/IP & MS/TP Interface



General

Content of Delivery	Intesis Gateway, Installation Manual, AC Connection cable.
Mounting	DIN rail mount (bracket included), Wall mount
Housing Materials	Plastic
Warranty (years)	3 years
Packaging Material	Cardboard

Identification and Status

Product ID	INBACMIT001I000
Country of Origin	Spain
HS Code	8517620000
Export Control Classification Number (ECCN)	EAR99

Physical Features

Connectors / Input / Output	EIA-485, Ethernet, HVAC port, Console port USB.
LED Indicators	Gateway and communication status.
DIP & Rotary Switches	EIA-485 serial port configuration. Gateway settings.

Certifications and Standards

ETIM Classification	EC001604
WEEE Category	IT and telecommunications equipment

Mitsubishi Electric Domestic, Mr.Slim and City Multi to BACnet/IP & MS/TP Interface



Use Case

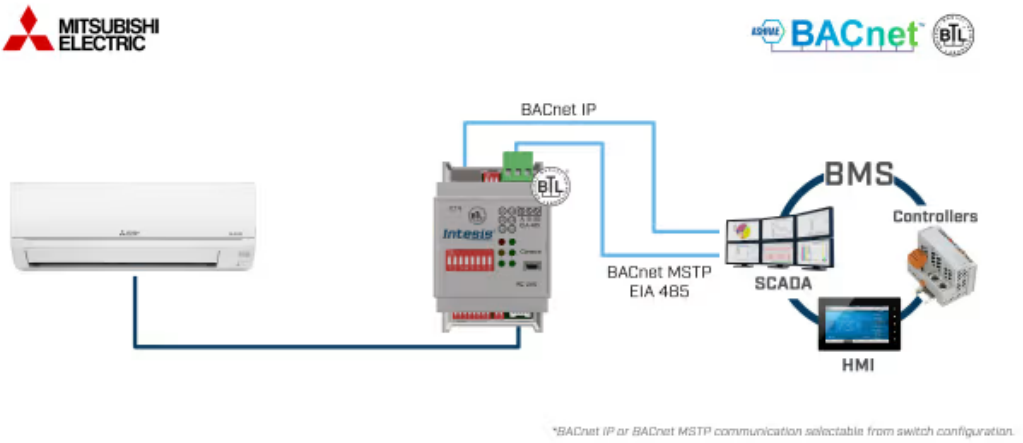

Integration example.