# Mustang Toggle Switches

**Specifications:**

| | |
|---|---|
| Contact rating: | 250 V AC, 3 A / 125 V AC, 6 A<br>30 V DC, 4 A / 12 V DC, 5 A<br>6 V DC, 6 A |
| Contact resistance: | < 10 mΩ |
| Insulation resistance: | > 1000 MΩ at 500 V DC |
| Dielectric strength: | 1500 V, 50 Hz for the duration of 1 minute |
| Operating temperature: | – 45° to + 140° C |
| Mechanical life: | minimum 300 000 operations |
| Contacts: | coin silver (common contact copper alloy, silver-plated)<br>also available gold-plated version B and G (see page 4) |
| Terminals: | solder tags, copper alloy silver-plated<br>further terminal versions see page 8 |
| Material: | case: diallyle-phthalate, meets UL 94 V–0, black<br>lever: chromium-plated, metal parts: nickel-plated |
| Mounting: | bushing 15/32-32 THD with locking plate (M 12 x 0,75), key 14 mm |
| Soldering conditions: | hand-soldering – max.: 60 W, 3 sec, 420° C<br>auto-soldering – max.: 5 sec, 270° C |

**Accessories:**

Plastic caps (height 12,7 mm)

| | |
|---|---|
| orange | C 2103 |
| blue | C 2104 |
| black | C 2105 |
| green | C 2106 |
| grey | C 2107 |
| yellow | C 2108 |
| red | C 2109 |
| white | C 2110 |



Waterproof sealing cap (height 21,4 mm)

| | |
|---|---|
| grey | ET 307 |



Waterproof sealing cap (height 11 mm)

| | |
|---|---|
| grey | ET 507 |



**Models:** Switching functions



S P D T ●

| | | | |
|---|---|---|---|
| MTG 106 D | on | – | on |
| MTG 106 E | on | off | on |
| MTG 106 F | mom | – | on |
| MTG 106 G | mom | off | mom |
| MTG 106 H | mom | off | on |

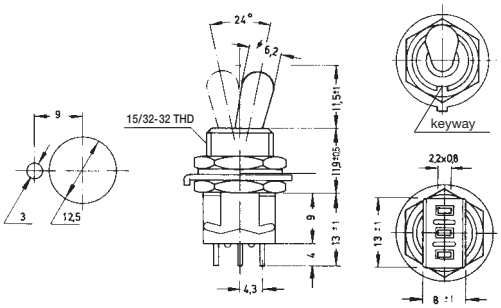




D P D T

| | | | |
|---|---|---|---|
| MTG 206 N | on | – | on |
| MTG 206 P | on | off | on |
| MTG 206 R | mom | – | on |
| MTG 206 S | mom | off | mom |
| MTG 206 T | mom | off | on |

measures: a = 9, b = 13 ± 1

| | | | |
|---|---|---|---|
| MTG 206 PA* | on | on | on |
| MTG 206 SA* | mom | on | mom |
| MTG 206 TA* | mom | on | on |

measures: a = 11,5, b = 15,5 ± 1

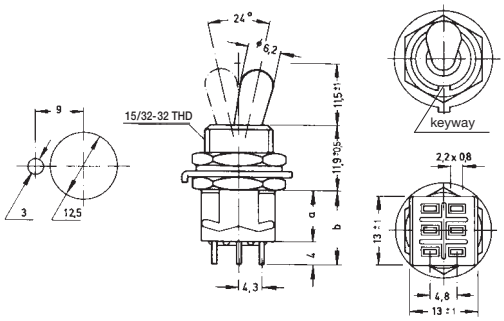




3 P D T

| | | | |
|---|---|---|---|
| MTG 306 D | on | – | on |
| MTG 306 E* | on | off | on |
| MTG 306 F* | mom | – | on |
| MTG 306 G* | mom | off | mom |
| MTG 306 H* | mom | off | on |

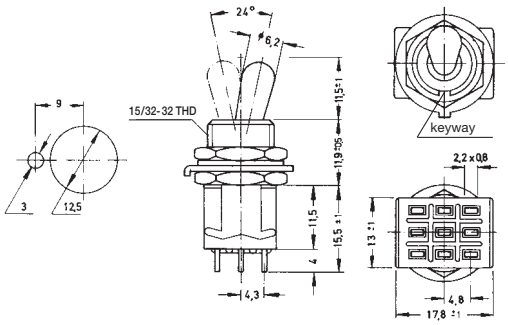




4 P D T

| | | | |
|---|---|---|---|
| MTG 406 N | on | – | on |
| MTG 406 P* | on | off | on |
| MTG 406 R* | mom | – | on |
| MTG 406 S* | mom | off | mom |
| MTG 406 T* | mom | off | on |
| MTG 406 PA* | on | on | on |
| MTG 406 SA* | mom | on | mom |
| MTG 406 TA* | mom | on | on |

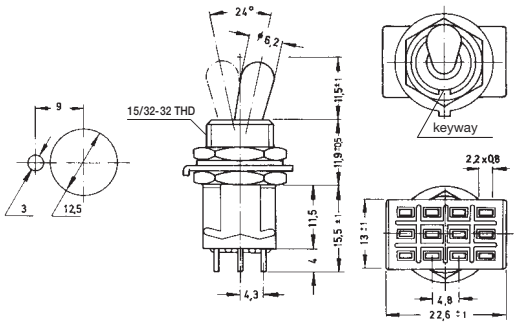




* Non-stock item; minimum quantity and delivery time on request.