SOLENOID VALVES

direct operated
for high pressure fluids
1/8 - 1/4

NC 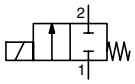

NO 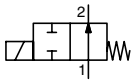

2/2
Series
262

FEATURES

- *High operating pressure*
- *RoHS compliance*
- *AC/DC interchangeability of the coil (10,1 W/11,6 W and 17,1 W/22,6 W)*
- *Valves do not require a minimum operating pressure*
- *Large selection of seal materials providing wide chemical compatibility*
- *The solenoid valves satisfy all relevant EC directives*



C

GENERAL

Differential pressure	See «SPECIFICATIONS» [1 bar =100 kPa]
Maximum viscosity	65 cSt (mm²/s)
Response time	5 - 25 ms

fluids (∗)	temperature range (TS)	seal materials (∗)
air, inert gas, water, oil	-25°C to +80°C	NBR (nitrile)
	0°C to +60°C	UR (cast urethane)

GENERAL

MATERIALS IN CONTACT WITH FLUID (∗) Ensure that the compatibility of the fluids in contact with the materials is verified		
Body	Brass	Stainless steel, AISI 304
Shading coil	Copper	Silver
Core tube	Stainless steel, AISI 305	
Core and plugnut	Stainless steel, AISI 430F	
Springs	Stainless steel, AISI 302	
Seal	NBR	
Disc	NBR or UR	
Disc holder (NO function)	PA	

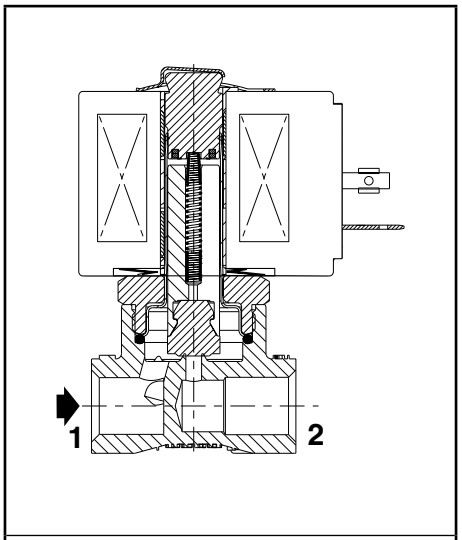

NC function

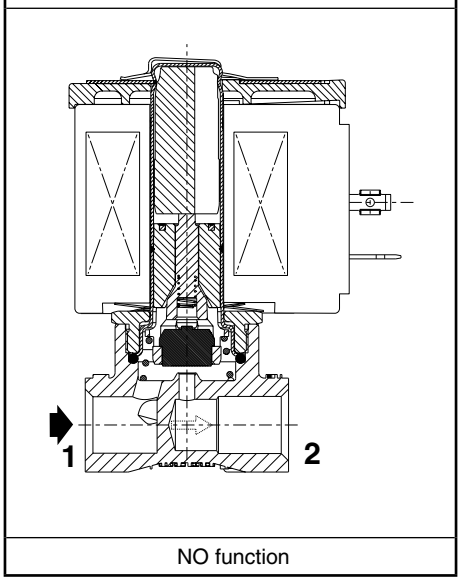

NO function

ELECTRICAL CHARACTERISTICS

Coil insulation class	F (AC) or H (DC)
Connector	Spade plug (cable Ø 6-10 mm)
Connector specification	ISO 4400 / EN 175301-803, form A
Electrical safety	IEC 335
Electrical enclosure protection	Moulded IP65 (EN 60529)
Standard voltages	DC (=) : 24V - 48V
(Other voltages and 60 Hz on request)	AC (~) : 24V - 48V - 115V - 230V/50 Hz

operator ambient temperature range (TS)	power ratings				replacement coil	
	inrush ~	holding ~		hot/cold =	~	=
(°C)	(VA)	(VA)	(W)	(W)	230 V/50 Hz	24 V DC
-25 to +55	30	16	8,1	7,7/ 10,6	238213-059	238513-006
	45	20	11,1	12,5/18,6	238213-157	238513-106
	50	25	10,1	8,5/11,6	238613-059	238913-006
	70	40	17,1	15,1/22,6	238613-159	238913-106

OPTIONS

Seals and disc (∗) [1] (fluid temperature range)	FPM (fluoroelastomer): -15°C to +100°C (coil class F) -15°C to +120°C (coil class H)
	EPDM (ethylene-propylene), 0°C to +100°C
	CR (chloroprene), 0°C to +80°C
	PTFE: -15°C to +100°C (coil class F) -15°C to +120°C (coil class H)
Plug with visual indication and peak voltage suppression or with cable length of 2 m (see Solenoids, Coils & Accessories section)	

(∗) Ensure that the compatibility of the fluids in contact with the materials is verified.

[1] The minimum ambient temperature of the solenoid valve is determined by the limitations of minimum temperature indicated.

00167GB-2012/R03
Availability, design and specifications are subject to change without notice. All rights reserved.

SPECIFICATIONS

pipe size	orifice size	flow coefficient Kv		operating pressure differential (bar) min.	operating pressure differential (bar) max. (PS) air (∗) ~	air (∗) =	water (∗) ~	water (∗) =	oil (∗) ~	oil (∗) =	power coil (W) ~	power coil (W) =	thread type	dimensions / type (1)	15-DIGIT PRODUCT CODE brass	15-DIGIT PRODUCT CODE stainless steel	voltage code 24 V/50 Hz	48 V/50 Hz	115 V/50 Hz	230 V/50 Hz	24 V/DC	48 V/DC
	(mm)	(m³/h)	(l/min)																			
WITHOUT MANUAL OPERATOR																						
NC - Normally closed, NBR seal and disc																						
1/8	1,2	0,05	0,8	0	51	51	51	41	50	34	8,1	10,6	G	01	G262K001S1N00	-	FL	FR	FT	F8	H1	H9
													NPT	01	-	8262K012S1N00						
	2,4	0,18	3	0	25	14	22	10	13	10	8,1	10,6	G	01	G262K014S1N00	-						
													NPT	01	-	8262K015S1N00						
	3,2	0,3	5	0	12	8	12	6,5	8	6	8,1	10,6	G	01	G262K002S1N00	-						
													NPT	01	-	8262K006S1N00						
					18	10	17	8	13	8	11,1	18,6	G	01	G262K016S1N00	-						
1/4	1,2	0,05	0,8	0	103	68	103	66	103	58	10,1	11,6	G*	02	E262K200S1W00 (2)	-						
					151	68	151	66	117	58	10,1	11,6	G*	02	-	E262K214S1W00 (2)						
													NPT	02	-	8262K214S1W00 (2)						
					51	51	51	41	50	34	8,1	10,6	G*	01	E262K019S1N00	-						
													NPT	01	-	8262K080S1N00						
	2,4	0,18	3	0	25	14	22	10	11	10	8,1	10,6	G*	01	E262K020S1N00	-						
													NPT	01	-	8262K086S1N00						
					34	19	24	13	18	13	11,1	18,6	G*	01	E262K021S1N00	-						
					40	16	28	16	28	15	10,1	11,6	G*	02	E262K108S1N00	E262K182S1N00						
													NPT	02	-	8262K182S1N00						
					49	41	28	28	28	27	17,1	22,6	G*	02	E262K109S1N00	E262K183S1N00						
													NPT	02	-	8262K183S1N00						
	3,2	0,3	5	0	12	8	12	6,5	6	5,5	8,1	10,6	G*	01	E262K022S1N00	-						
													NPT	01	-	8262K007S1N00						
					18	10	17	8	10	7,5	11,1	18,6	G*	01	E262K023S1N00	-						
					23	7,5	20	7	14	6,5	10,1	11,6	G*	02	E262K232S1N00	E262K184S1N00						
													NPT	02	-	8262K184S1N00						
					34	17	26	17	24	15	17,1	22,6	G*	02	E262K110S1N00	E262K185S1N00						
													NPT	02	-	8262K185S1N00						
	4	0,45	7,5	0	14	3,5	13	3,5	10	3,5	10,1	11,6	G*	02	E262K202S1N00	E262K220S1N00						
													NPT	02	-	8262K220S1N00						
					20	7,5	14	7,5	14	7,5	17,1	22,6	G*	02	E262K112S1N00	E262K187S1N00						
													NPT	02	-	8262K187S1N00						
	5,6	0,63	10,5	0	6,5	2	6,5	2	6,5	2	10,1	11,6	G*	02	E262K208S1N00	E262K226S1N00						
													NPT	02	-	8262K226S1N00						
					8,5	4	8,5	4	8,5	4	17,1	22,6	G*	02	E262K114S1N00	E262K188S1N00						
													NPT	02	-	8262K188S1N00						
					3,5	2	3,5	2	2,5	1,9	8,1	10,6	G*	01	E262K013S1N00	-						
													NPT	01	-	8262K036S1N00						
	7,1	0,76	12,7	0	2	1,6	2	1,5	2	1,3	8,1	10,6	G*	01	E262K090S1N00	-						
													NPT	01	-	8262K038S1N00						
					4	1,5	5	1,5	4	1,3	10,1	11,6	G*	02	E262K210S1N00	E262K189S1N00						
													NPT	02	-	8262K189S1N00						
					6	3	6	3	6	3	17,1	22,6	G*	02	E262K212S1N00	E262K230S1N00						
													NPT	02	-	8262K230S1N00						
NO - Normally open, NBR seal and disc																						
1/8	1,2	0,05	0,8	0	79	44	62	33	55	22	10,1	11,6	G	02	G262K155S1W00 (2)	G262K168S1W00 (2)	FL	FR	FT	F8	H1	H9
													NPT	02	-	8262K168S1W00 (2)						
					51	44	51	38	51	27	10,1	11,6	G	02	G262K156S1N00	G262K169S1N00						
													NPT	02	-	8262K169S1N00						
	2,4	0,18	3	0	18	11	15	9	12	6,5	10,1	11,6	G	02	G262K128S1N00	G262K236S1N00						
													NPT	02	-	8262K236S1N00						
	3,2	0,3	5	0	11	6,5	10	6,5	8,5	4,5	10,1	11,6	G	02	G262K129S1N00	G262K237S1N00						
													NPT	02	-	8262K237S1N00						
1/4	1,2	0,05	0,8	0	79	44	62	33	55	22	10,1	11,6	G*	02	E262K161S1W00 (2)	E262K199S1W00 (2)						
													NPT	02	-	8262K199S1W00 (2)						
				0	51	44	51	38	51	27	10,1	11,6	G*	02	E262K260S1N00	E262K130S1N00						
													NPT	02	-	8262K130S1N00						
	2,4	0,18	3	0	18	11	15	9	12	6,5	10,1	11,6	G*	02	E262K261S1N00	E262K134S1N00						
													NPT	02	-	8262K134S1N00						
	3,2	0,3	5	0	11	6,5	10	6,5	8,5	4,5	10,1	11,6	G*	02	E262K262S1N00	E262K138S1N00						
													NPT	02	-	8262K138S1N00						
	4	0,47	7,8	0	6	4	6	3,5	4,5	3	10,1	11,6	G*	02	E262K263S1N00	E262K142S1N00						
													NPT	02	-	8262K142S1N00						
	5,6	0,72	12	0	3	2	3	1,7	2,5	1,7	10,1	11,6	G*	02	E262K264S1N00	E262K148S1N00						
													NPT	02	-	8262K148S1N00						
	7,1	0,83	13,8	0	2	1,3	2	1,1	2	1,1	10,1	11,6	G*	02	E262K265S1N00	E262K152S1N00						
													NPT	02	-	8262K152S1N00						

(1) For dimensions, see drawing(s) for each construction type on the following page(s).

(∗) Ensure that the compatibility of the fluids in contact with the materials is verified.

(2) UR disc only, fluid temperature 0°C to+60°C, no other elastomer can be used.

00167GB-2012/R01
Availability, design and specifications are subject to change without notice. All rights reserved.

SPECIFICATIONS

pipe size	orifice size	flow coefficient Kv		operating pressure differential (bar) min.	max. (PS) air (∗)		water (∗)		oil (∗)		power coil (W)		thread type	dimensions / type (1)	15-DIGIT PRODUCT CODE brass	stainless steel	voltage code 24 V/50 Hz	48 V/50 Hz	115 V/50 Hz	230 V/50 Hz	24 V/DC	48 V/DC
	(mm)	(m³/h)	(l/min)		~	=	~	=	~	=	~	=										
WITH MAINTAINED MANUAL OPERATOR																						
NC - Normally closed, NBR seal and disc																						
1/4	2,4	0,18	3	0	40	16	28	16	28	15	10,1	11,6	G*	02	**E262K108S1N01**	**E262K182S1N01**	FL	FR	FT	F8	H1	H9
													NPT	02	-	**8262K182S1N01**						
					49	41	28	28	28	27	17,1	22,6	G*	02	**E262K109S1N01**	**E262K183S1N01**						
													NPT	02	-	**8262K183S1N01**						
	3,2	0,3	5	0	23	7,5	20	7	14	6,5	10,1	11,6	G*	02	**E262K232S1N01**	**E262K184S1N01**						
													NPT	02	-	**8262K184S1N01**						
					34	17	26	17	24	15	17,1	22,6	G*	02	**E262K110S1N01**	**E262K185S1N01**						
													NPT	02	-	**8262K185S1N01**						
	4	0,45	7,5	0	14	3,5	13	3,5	10	3,5	10,1	11,6	G*	02	**E262K202S1N01**	**E262K220S1N01**						
													NPT	02	-	**8262K220S1N01**						
					20	7,5	14	7,5	14	7,5	17,1	22,6	G*	02	**E262K112S1N01**	**E262K187S1N01**						
													NPT	02	-	**8262K187S1N01**						
	5,6	0,63	10,5	0	6,5	2	6,5	2	6,5	2	10,1	11,6	G*	02	**E262K208S1N01**	**E262K226S1N01**						
													NPT	02	-	**8262K226S1N01**						
					8,5	4	8,5	4	8,5	4	17,1	22,6	G*	02	**E262K114S1N01**	**E262K188S1N01**						
													NPT	02	-	**8262K188S1N01**						
	7,1	0,76	12,7	0	4	1,5	5	1,5	4	1,3	10,1	11,6	G*	02	**E262K210S1N01**	**E262K189S1N01**						
													NPT	02	-	**8262K189S1N01**						
					6	3	6	3	6	3	17,1	22,6	G*	02	**E262K212S1N01**	**E262K230S1N01**						
													NPT	02	-	**8262K230S1N01**						

(1) For dimensions, see drawing(s) for each construction type on the following page(s).

(∗) Ensure that the compatibility of the fluids in contact with the materials is verified.

(2) UR disc only, fluid temperature 0°C to+60°C, no other elastomer can be used.

C

00167GB-2012/R01
Availability, design and specifications are subject to change without notice. All rights reserved.

15-DIGIT PRODUCT CODE

G 262 K 001 S1 N00 H1

Thread connection
G = ISO 228/1
E = ISO 228/1 & ISO 7/1 (combination thread)
8 = NPT (SAE 71051)

Product series
262

Revision letter
K = Initial release

Valves version

Voltage - class
FL = 24 V / 50 Hz - class F
FR = 48 V / 50 Hz - class F
FT = 115 V / 50 Hz - class F
F8 = 230 V / 50 Hz - class F
H1 = 24 V DC - class H
H9 = 48 V DC - class H

Options
Without manual operator
N00 = NBR disc and seals
V00 = FPM disc and seals
E00 = EPDM disc and seals
J00 = CR disc and seals
T00 = PTFE disc and seals (1)
(1) (Max. operating pressure limited to 75% of standard value)
With maintained manual operator
N01 = NBR disc and seals
V01 = FPM disc and seals
E01 = EPDM disc and seals
J01 = CR disc and seals

Electrical interface
S1 = With spade plug connector

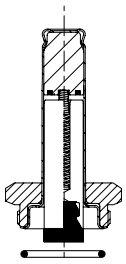

	SPARE PARTS KITS CODE (✳)													
		AC (~)							DC (=)						
			NBR	FPM	EPDM	CR	PTFE	NBR + UR		NBR	FPM	EPDM	CR	PTFE	NBR + UR
	E262K013/019/020/021/022/023/090	M200001	N00	V00	E00	J00	T00	-	M200005	N00	V00	E00	J00	T00	-
	E262K108/109/110/112/114	M200007	N00	V00	E00	J00	T00	-	M200007	N00	V00	E00	J00	T00	-
	E262K130	M200017	N00	V00	E00	J00	T00	-	M200033	N00	V00	E00	J00	T00	-
	E262K134	M200018	N00	V00	E00	J00	T00	-	M200033	N00	V00	E00	J00	T00	-
	E262K138/142/148/152	M200018	N00	V00	E00	J00	T00	-	M200034	N00	V00	E00	J00	T00	-
	E262K161	M200021	-	-	-	-	-	W00	-	-	-	-	-	-	-
	E262K182/183/184/185/187/188/189	M200008	N00	V00	E00	J00	-	-	M200008	N00	V00	E00	J00	-	-
	E262K200	M200007	-	-	-	-	-	W00	M200007	-	-	-	-	-	W00
	E262K202/208/210/212	M200007	N00	V00	E00	J00	T00	-	M200007	N00	V00	E00	J00	T00	-
	E262K214	M200008	-	-	-	-	-	W00	M200008	-	-	-	-	-	W00
	E262K220/226/230	M200008	N00	V00	E00	J00	-	-	M200008	N00	V00	E00	J00	-	-
	E262K232	M200007	N00	V00	E00	J00	T00	-	M200007	N00	V00	E00	J00	T00	-
	E262K260	M200015	N00	V00	E00	J00	T00	-	M200031	N00	V00	E00	J00	T00	-
	E262K261	M200016	N00	V00	E00	J00	T00	-	M200031	-	-	-	-	-	W00
	E262K262/263/264/265	M200016	N00	V00	E00	J00	T00	-	M200032	N00	V00	E00	J00	T00	-
	G262K001/002/014/016	M200001	N00	V00	E00	J00	T00	-	M200005	N00	V00	E00	J00	T00	-
	G262K128	M200016	N00	V00	E00	J00	T00	-	M200031	N00	V00	E00	J00	T00	-
	G262K129	M200016	N00	V00	E00	J00	T00	-	M200032	N00	V00	E00	J00	T00	-
	G262K155	M200021	-	-	-	-	-	W00	-	-	-	-	-	-	-
	G262K156	M200015	N00	V00	E00	J00	T00	-	M200031	N00	V00	E00	J00	T00	-
	G262K168	M200021	-	-	-	-	-	W00	-	-	-	-	-	-	-
	G262K169	M200017	N00	V00	E00	J00	T00	-	M200033	N00	V00	E00	J00	T00	-
	G262K199	M200021	-	-	-	-	-	W00	-	-	-	-	-	-	-
	G262K236	M200018	N00	V00	E00	J00	T00	-	M200033	N00	V00	E00	J00	T00	-
	G262K237	M200018	N00	V00	E00	J00	T00	-	M200034	N00	V00	E00	J00	T00	-
	8262K006/007/012/015/036/038	M200003	N00	V00	E00	J00	T00	-	M200005	N00	V00	E00	J00	T00	-
	8262K080/086	M200003	N00	V00	E00	J00	T00	-	M200005	N00	V00	E00	J00	T00	-
	8262K130	M200017	N00	V00	E00	J00	T00	-	M200033	N00	V00	E00	J00	T00	-
	8262K134	M200018	N00	V00	E00	J00	T00	-	M200033	N00	V00	E00	J00	T00	-
	8262K138/142/148/152	M200018	N00	V00	E00	J00	T00	-	M200034	N00	V00	E00	J00	T00	-
	8262K168	M200021	-	-	-	-	-	W00	-	-	-	-	-	-	-
	8262K169	M200017	N00	V00	E00	J00	T00	-	M200033	N00	V00	E00	J00	T00	-
	8262K182/183/184/185 187/188/189	M200008	N00	V00	E00	J00	-	-	M200008	N00	V00	E00	J00	-	-
	8262K199	M200021	-	-	-	-	-	W00	-	-	-	-	-	-	-
	8262K220/226/230	M200008	N00	V00	E00	J00	-	-	M200008	N00	V00	E00	J00	-	-
	8262K236	M200018	N00	V00	E00	J00	T00	-	M200033	N00	V00	E00	J00	T00	-
	8262K237	M200018	N00	V00	E00	J00	T00	-	M200034	N00	V00	E00	J00	T00	-

(✳) Ensure that the compatibility of the fluids in contact with the materials is verified.

All leaflets are available on: **www.asconumatics.eu**

00167GB-2012/R02
Availability, design and specifications are subject to change without notice. All rights reserved.

		ACCESSORIES CODE
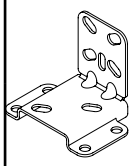	Mounting bracket Steel version (AISI 1010 / 1.1121)	**M200094A00**
	Mounting bracket Stainless steel version (AISI 304 / 1.4301)	**M200095A00**

INSTALLATION

- The solenoid valves can be mounted in any position without affecting operation
- Solenoid valves have 2 mounting holes in body
- Pipe connections 1/4 (G*) have standard combination thread according to ISO 228/1 and ISO 7/1. Pipe connections G 1/8 have standard thread according to ISO 228/1
- Pipe connection identifier is 8 = NPT (SAE 71051)
- Installation/maintenance instructions are included with each valve

C

DIMENSIONS (mm), WEIGHT (kg)



TYPE 01
Electrical interface “S1”
Epoxy moulded
IEC 335 / ISO 4400
IP65

1/8, power coil 8,1 W / 10,6 W and 11,1 W / 18,6 W

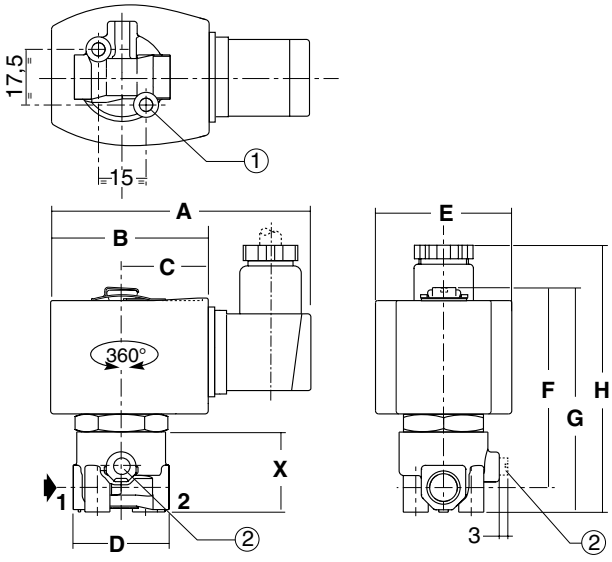

1/4, power coil 8,1 W / 10,6 W and 11,1 W / 18,6 W

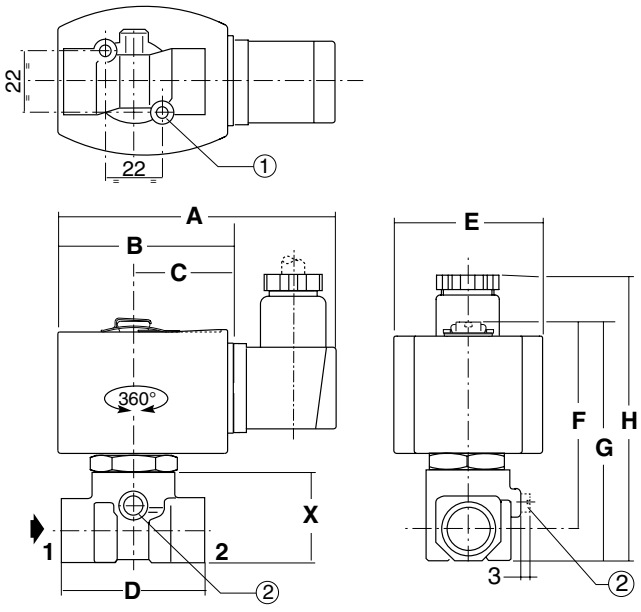

type	pipe size	A	B	C	D	E	F	G	H	X	weight (1)
01	1/8	91	51	30	30	43	62	71	88	26	0,30
	1/4	95	57	33	40	43	65	75	92	30	0,42

(1) Incl. coil(s) and connector(s).

① 2 mounting holes:
M5 dia., depth 6,5 mm (1/8)
M5 dia., depth 7,5 mm (1/4)
② Manual operator location

00167GB-2012/R03
Availability, design and specifications are subject to change without notice. All rights reserved.

DIMENSIONS (mm), WEIGHT (kg)



TYPE 02

Electrical interface “S1”
Epoxy moulded
IEC 335 / ISO 4400
IP65

NC: 1/4, power coil 10,1 W / 11,6 W and 17,1 W / 22,6 W

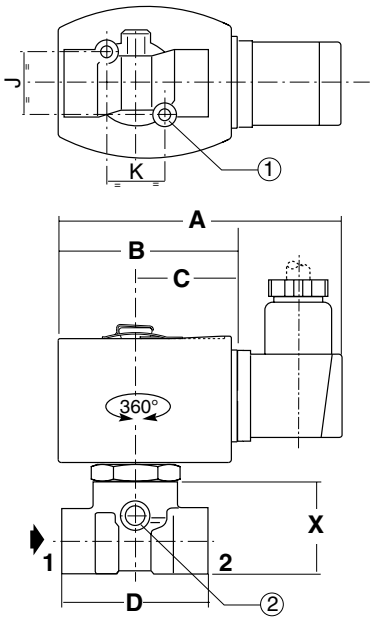

NO: 1/8-1/4, power coil 10,1 W / 11,6 W

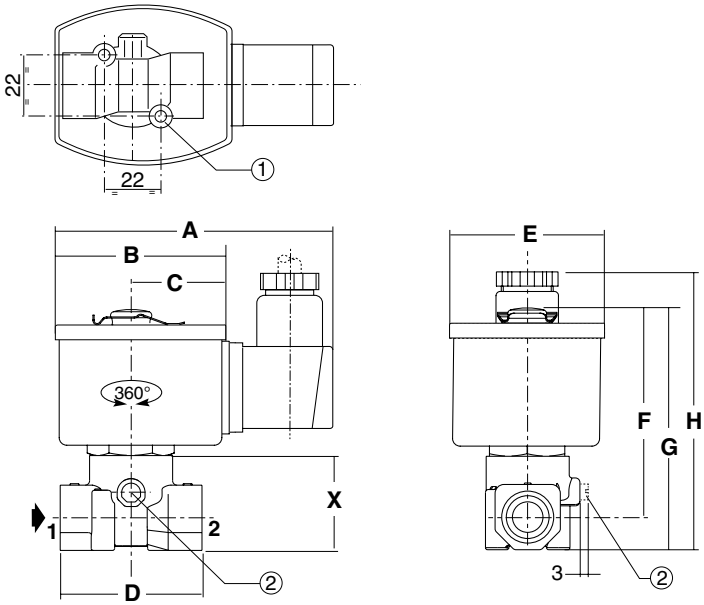

type	pipe size	A	B	C	D	E	F	G	H	J	K	X	weight (1)
02	1/8 **(NO)**	96	59	34	30	52	67	75	88	17,5	15	26	0,50
	1/4 **(NC)**	95	57	33	40	50	69	78	96	22	22	30	0,60
	1/4 **(NO)**	96	59	34	40	52	69	78	96	22	22	30	0,62

(1) Incl. coil(s) and connector(s).

(1) 2 mounting holes:
M5 dia., depth 7,5 mm (1/4)
(2) Manual operator location.

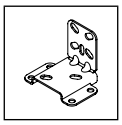

Mounting bracket

Steel or stainless steel

M200094A00 / M200095A00

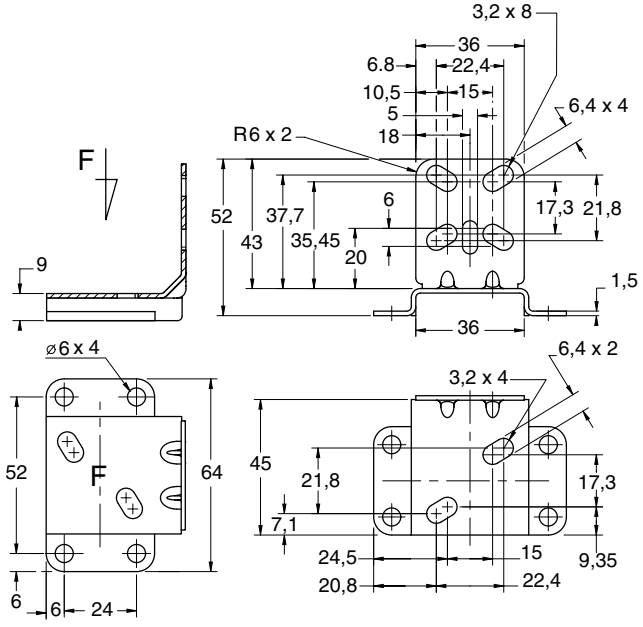

00167GB-2012/R03
Availability, design and specifications are subject to change without notice. All rights reserved.