182.72.104.66UCPStehlager-Gehäuseeinheiten

Plummer block housing units

UCP206 (Series UCP)

cast iron housing, with long base, radial insert ball bearing with grub screws in inner ring, RSR seals

The datasheet is only an overview of dimensions and basic load ratings of the selected product. Please always observe all the guidelines in these overview pages. Further information is given on many products under the menu item "Description". You can also order comprehensive information via the Catalogue selection system (https://www.schaeffler.de/content.schaeffler.de/en/news_media/index.jsp) or by telephone on +49 (91 32) 82 - 28 97.

d	30	mm	
L	165	mm	
H_2	83	mm	
A	48	mm	
B	38,1	mm	
H	42,9	mm	
H_1	17	mm	
J	121	mm	
N	17	mm	
N_1	21	mm	
S_1	22,2	mm	
m	1,29	kg	Mass
	P206		Designation, housing
	UC206		Designation, radial insert ball bearing

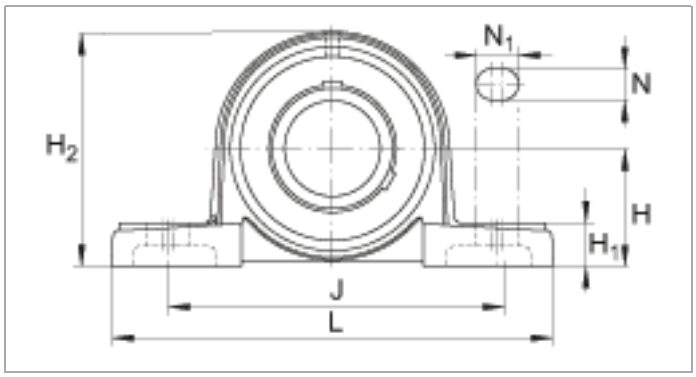
N1
N
H2
H
H1
J
L

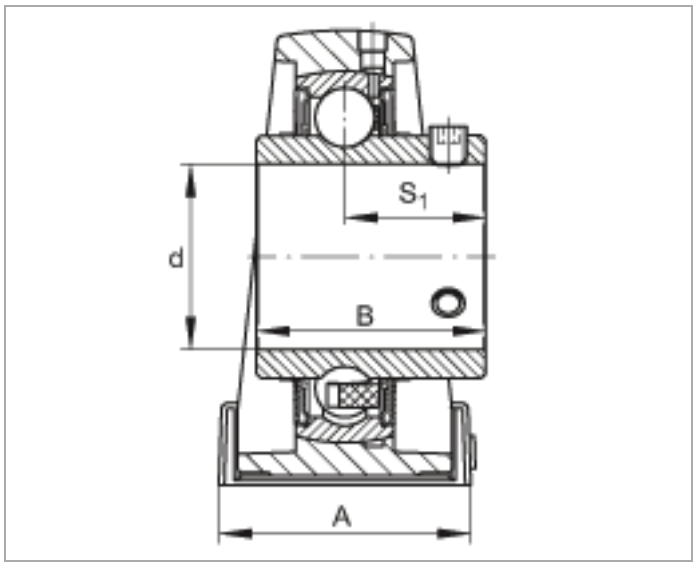
S1
d
B
A