HF140FF MINIATURE INTERMEDIATE POWER RELAY

c UL us
File No.:E134517

File No.:R50149131

File No.:CQC10002046173



Features

- 10A switching capability
- 5kV dielectric strength (between coil and contacts)
- 2.0mm contact gap available
- Sockets available
- Plastic sealed and flux proofed types available
- UL insulation system: Class F available
- Environmental friendly product (RoHS compliant)
- Outline Dimensions: (29.0 x 13.0 x 26.3) mm

CONTACT DATA

Contact arrangement	2A, 2C
Contact resistance	50mΩ max.(at 1A 24VDC)
Contact material	$AgSnO_2$, AgNi, AgCdO
Contact rating (Res. load)	10A 250VAC 8A 30VDC
Max. switching voltage	250VAC / 30VDC
Max. switching current	10A
Max. switching power	2500VA / 240W
Mechanical endurance	Standard: 1 x 10^7OPS W type(1.5mm): 5 x10^5OPS W type(2.0mm): 3 x10^5OPS
Electrical endurance	1 x 10^5OPS (NO or NC, 10A 250VAC, Resistive load, Room temp., 1s on 9s off) 1 x 10^5OPS (NO or NC, 8A 30VDC, Resistive load, Room temp., 1s on 9s off)

Notes: For plastic sealed type, the venting-hole should be excised in electrical endurance test.

CHARACTERISTICS

Insulation resistance		1000MΩ (at 500VDC)
Dielectric strength	Between coil & contacts	5000VAC 1min
	Between contacts sets	3000VAC 1min
	Between open contacts	Standard:1000VAC 1min W type(1.5mm):2000VAC 1min W type(2.0mm):2500VAC 1min
Surge voltage (between coil & contacts)		10kV (1.2/50 μs)
Operate time (at nomi. volt.)		15ms max.
Release time (at nomi. volt.)		5ms max.
Humidity		5% to 85% RH
Ambient temperature		-40°C to 85°C
Shock resistance	Functional	98m/s²
	Destructive	980m/s²
Vibration resistance		10Hz to 55Hz 1.5mmDA
Termination		PCB
Unit weight		Approx. 18g
Construction		Plastic sealed, Flux proofed

Notes: 1) The data shown above are initial values.
2) Please find coil temperature curve in the characteristic curves below.
3) UL insulation system: Class F, Class B.

COIL

Coil power	Standard: Approx. 530mW W type(1.5mm): Approx. 800mW W type(2.0mm): Approx. 1.4W

COIL DATA at 23°C

Standard type

Nominal Voltage VDC	Pick-up Voltage VDC max.	Drop-out Voltage VDC min.	Max. Voltage VDC *	Coil Resistance Ω
3	2.40	0.3	3.9	17 x (1±10%)
5	4.00	0.5	6.5	47 x (1±10%)
6	4.80	0.6	7.8	68 x (1±10%)
9	7.20	0.9	11.7	160 x (1±10%)
12	9.60	1.2	15.6	275 x (1±10%)
18	14.40	1.8	23.4	620 x (1±10%)
24	19.20	2.4	31.2	1100 x (1±10%)
48	38.40	4.8	62.4	4170 x (1±10%)
60	48.00	6.0	78.0	7000 x (1±10%)

COIL DATA

at 23˚C

W Type (1.5mm)

Nominal Voltage VDC	Pick-up Voltage VDC max.	Drop-out Voltage VDC min.	Max. Allowable Voltage VDC*	Coil Resistance Ω
3	2.25	0.3	3.3	11.3 x (1±10%)
5	3.75	0.5	5.5	31 x (1±10%)
6	4.50	0.6	6.6	45 x (1±10%)
9	6.75	0.9	9.9	101 x (1±10%)
12	9.00	1.2	13.2	180 x (1±10%)
18	13.5	1.8	19.8	405 x (1±10%)
24	18.0	2.4	26.4	720 x (1±10%)
48	36.0	4.8	52.8	2880 x (1±10%)
60	45.0	6.0	66.0	4500 x (1±10%)

W Type (2.0mm)

Nominal Voltage VDC	Pick-up Voltage VDC max.	Drop-out Voltage VDC min.	Max. Allowable Voltage VDC*	Coil Resistance Ω
5	3.75	0.5	5.5	18 x (1±10%)
6	4.50	0.6	6.6	26 x (1±10%)
9	6.75	0.9	9.9	58 x (1±10%)
12	9.00	1.2	13.2	102 x (1±10%)
24	18.0	2.4	26.4	410 x (1±10%)
48	36.0	4.8	52.8	1650 x (1±10%)

Notes: 1) When require pick-up voltage < 75% of nominal voltage, special order allowed.
2) *Maximum voltage refers to the maximum voltage which relay coil could endure in a short period of time.
3) Under ambient temperature, applying more than 80% of rating voltage to coil, relay will take action accordingly. But in order to meet the stated product performance, please apply rated voltage to coli.
4) For the CO version whose contact gap is 1.5 mm, the operation voltage ≤85% of rated voltage.

SAFETY APPROVAL RATINGS

UL/CUL	Standard	AgCdO		TV-3 125VAC 10A 250VAC 10A 30VDC 1/4HP 240VAC 1/8HP 120VAC
		AgNi		10A 250VAC 10A 30VDC 12A 277VAC/250VAC Resistive at 70˚C 1/3HP 125VAC at 40˚C
		$AgSnO_2$	2 Form A	10A 250VAC 10A 30VDC 12A 277VAC/250VAC Resistive at 70˚C 1/3HP 125VAC at 40˚C 3/4HP 250VAC at 40˚C
			2 Form C	10A 250VAC 10A 30VDC 12A 277VAC/250VAC Resistive at 70˚C 1/3HP 125VAC at 40˚C 3/4HP 250VAC at 40˚C
	W type	AgCdO	2 Form A	TV-3 125VAC 10A 250VAC
		$AgSnO_2$	2 Form A	12A 277VAC/250VAC Resistive at 70˚C 1/3HP 125VAC at 40˚C 3/4HP 250VAC at 40˚C
TÜV		AgCdO	2 Form A 2 Form C	10A 250VAC 10A 30VDC
		AgNi	2 Form A	12A 250VAC
			2 Form C	10A 250VAC
		$AgSnO_2$	2 Form A	12A 250VAC

Notes: 1) All values unspecified are at room temperature.
2)Only typical loads are listed above. Other load specifications can be available upon request.

ORDERING INFORMATION

	HF140FF/	012	-2H	S	W	T	G	F	(XXX)
Type									
Coil voltage	3, 5, 6, 9, 12, 18, 24, 48, 60VDC								
Contact arrangement	**2H:** 2 Form A **2Z:** 2 Form C								
Construction[1)2)]	**S:** Plastic sealed(No smoky-gray cover) **Nil:** Flux proofed								
Contact Gap	**W:** Large contact gap(Only for 2 Form A)[3)] **Nil:** Standard								
Contact material	**T:** $AgSnO_2$ **3:** AgNi **Nil:** AgCdO								
Contact plating	**G:** Gold plated **Nil:** No gold plated								
Insulation standard	**F:** Class F **Nil:** Class B								
Special code[5)]	**XXX:** Customer special requirement **Nil:** Standard								

Notes:1) We recommend flux proofed types for a clean environment (free from contaminations like H_2S, SO_2, NO_2, dust, etc.).
We suggest to choose plastic sealed types and validate it in real application for an unclean environment (with contaminations like H2S, SO2, NO2, dust, etc).

2) Contact is recommended for suitable condition and specifications if water cleaning or surface process is involved in assembling relays on PCB.

3) There are two specifications to W type: 1.5mm contact gap and 2.0mm contact gap.The default W type is 1.5mm. So please add the special code "(456)" when releasing order,if 2.0mm contact gap is required.

4) The standard type is made of black cover. If smoke cover is required, please add a special suffix (611) when ordering. Please take note that smoke cover is only availabe for flux proofed type.

5) The customer special requirement express as special code after evaluating by Hongfa. e.g.(456) means contact gap can reach 2.0mm.

OUTLINE DIMENSIONS, WIRING DIAGRAM AND PC BOARD LAYOUT

Unit: mm

Outline Dimensions

2 Form A

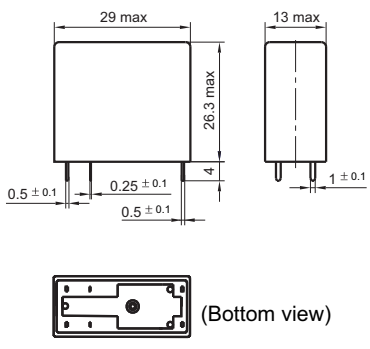

2 Form C

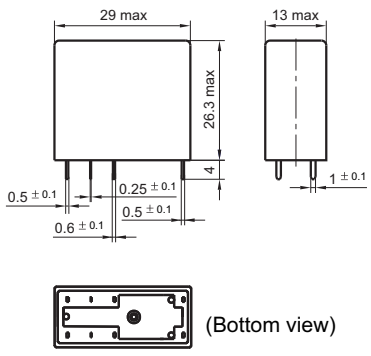

OUTLINE DIMENSIONS, WIRING DIAGRAM AND PC BOARD LAYOUT

Unit: mm

Wiring Diagram (Bottom view)



PCB Layout (Bottom view)

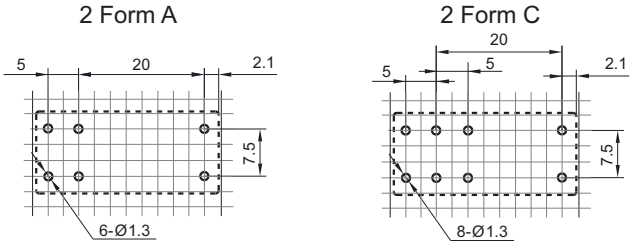

Remark: 1) In case of no tolerance shown in outline dimension: outline dimension ≤1mm, tolerance should be ±0.2mm; outline dimension >1mm and ≤5mm, tolerance should be ±0.3mm; outline dimension >5mm, tolerance should be ±0.4mm.
2) The tolerance without indicating for PCB layout is always ±0.1mm.
3) The width of the gridding is 2.5mm.

CHARACTERISTIC CURVES

MAXIMUM SWITCHING POWER

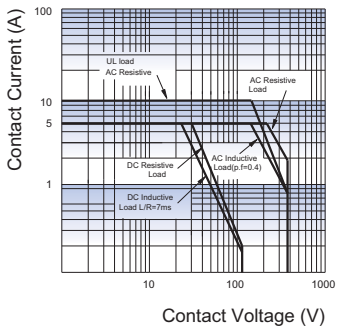

ENDURANCE CURVE

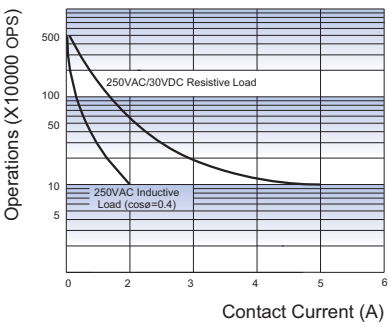

COIL TEMPERATURE RISE

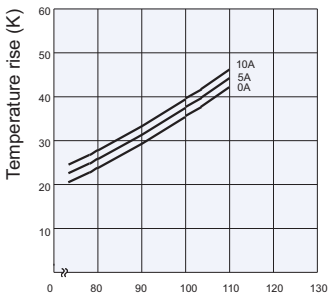

Test conditions:
No, Resistive load, Flux proofed,
Room temp., 1s on 9s off.

Disclaimer

The specification is for reference only. See to "Terminology and Guidelines" for more information. Specifications subject to change without notice. We could not evaluate all the performance and all the parameters for every possible application. Thus the user should be in a right position to choose the suitable product for their own application. If there is any query, please contact Hongfa for the technical service. However, it is the user's responsibility to determine which product should be used only.

© Xiamen Hongfa Electroacoustic Co., Ltd. All rights of Hongfa are reserved.