BF12T4A04860

FOUR-POLE CONTACTOR, IEC OPERATING CURRENT ITH (AC1) = 28A, AC COIL 60HZ, 48VAC



Product designation			Power contactor
Product type designation			BF12
Contact characteristics			
Number of poles		Nr.	4
Rated insulation voltage Ui IEC/EN		V	690
Rated impulse withstand voltage Uimp		kV	6
Operational frequency			
	min	Hz	25
	max	Hz	400
IEC Conventional free air thermal current Ith		A	28
Operational current Ie			
	AC-1 (≤40°C)	A	28
	AC-1 (≤55°C)	A	23
	AC-1 (≤70°C)	A	20
	AC-3 (≤440V ≤55°C)	A	12
	AC-4 (400V)	A	7.9
Rated operational power AC-1 (T≤40°C)			
	230V	kW	10
	400V	kW	18
	500V	kW	23
	690V	kW	32
IEC max current Ie in DC1 with L/R ≤ 1ms with 1 poles in series			
	≤24V	A	17
	48V	A	15
	75V	A	13
	110V	A	6
	220V	A	–
IEC max current Ie in DC1 with L/R ≤ 1ms with 2 poles in series			
	≤24V	A	20
	48V	A	20
	75V	A	18
	110V	A	13
	220V	A	1
IEC max current Ie in DC1 with L/R ≤ 1ms with 3 poles in series			
	≤24V	A	22
	48V	A	22
	75V	A	20
	110V	A	16
	220V	A	11
IEC max current Ie in DC1 with L/R ≤ 1ms with 4 poles in series			
	≤24V	A	20
	48V	A	20
	75V	A	20
	110V	A	16
	220V	A	12

The characteristics described in this document are subject to updates or modifications at any time. The descriptions, technical and functional information, illustrations and instructions in this brochure are purely illustrative, and are consequently not contractually binding

IEC max current Ie in DC3-DC5 with L/R ≤ 15ms with 1 poles in series			
	≤24V	A	12
	48V	A	11
	75V	A	10
	110V	A	2
	220V	A	–
IEC max current Ie in DC3-DC5 with L/R ≤ 15ms with 2 poles in series			
	≤24V	A	15
	48V	A	13
	75V	A	12
	110V	A	8
	220V	A	2
IEC max current Ie in DC3-DC5 with L/R ≤ 15ms with 3 poles in series			
	≤24V	A	18
	48V	A	18
	75V	A	15
	110V	A	12
	220V	A	6
IEC max current Ie in DC3-DC5 with L/R ≤ 15ms with 4 poles in series			
	≤24V	A	15
	48V	A	15
	75V	A	15
	110V	A	16
	220V	A	7
Short-time allowable current for 10s (IEC/EN60947-1)		A	150
Protection fuse			
	gG (IEC)	A	32
	aM (IEC)	A	12
Making capacity (RMS value)		A	120
Breaking capacity at voltage			
	440V	A	96
	500V	A	96
	690V	A	94
Resistance per pole (average value)		mΩ	2.5
Power dissipation per pole (average value)			
	Ith	W	2
	AC3	W	0.4
Tightening torque for terminals			
	min	Nm	1.5
	max	Nm	1.8
	min	lbin	1.1
	max	lbin	1.5
Tightening torque for coil terminal			
	min	Nm	0.8
	max	Nm	1
	min	lbin	0.8
	max	lbin	0.74
Max number of wires simultaneously connectable		Nr.	2
Conductor section			
AWG/Kcmil			
	max		10
Flexible w/o lug conductor section			
	min	mm²	1

The characteristics described in this document are subject to updates or modifications at any time. The descriptions, technical and functional information, illustrations and instructions in this brochure are purely illustrative, and are consequently not contractually binding

		max	mm²	6
Flexible c/w lug conductor section				
		min	mm²	1
		max	mm²	4
Flexible with insulated spade lug conductor section				
		min	mm²	1
		max	mm²	4
Power terminal protection according to IEC/EN 60529				IP20 when properly wired
Mechanical features				
Operating position				
		normal		Vertical plan
		allowable		±30°
Fixing				Screw / DIN rail 35mm
Weight			g	360
Conductor section				
	AWG/kcmil conductor section			
		max		10
Operations				
Mechanical life			cycles	20000000
Electrical life			cycles	2000000
Safety related data				
Performance level B10d according to EN/ISO 13489-1				
		rated load	cycles	2000000
		mechanical load	cycles	20000000
Mirror contats according to IEC/EN 609474-4-1				yes
EMC compatibility				yes
AC coil operating				
Rated AC voltage at 60Hz			V	48
AC operating voltage				
	of 60Hz coil powered at 60Hz			
	pick-up			
		min	%Us	80
		max	%Us	110
	drop-out			
		min	%Us	20
		max	%Us	55
AC average coil consumption at 20°C				
	of 60Hz coil powered at 60Hz			
		in-rush	VA	75
		holding	VA	9
Dissipation at holding ≤20°C 50Hz			W	2.5
Max cycles frequency				
Mechanical operation			cycles/h	3600
Operating times				
Average time for Us control				
	in AC			
	Closing NO			
		min	ms	8
		max	ms	24
	Opening NO			
		min	ms	10
		max	ms	20

The characteristics described in this document are subject to updates or modifications at any time. The descriptions, technical and functional information, illustrations and instructions in this brochure are purely illustrative, and are consequently not contractually binding

	Closing NC			
		min	ms	14
		max	ms	28
	Opening NC			
		min	ms	7
		max	ms	18
UL technical data				
Full-load current (FLA) for three-phase AC motor				
		at 480V	A	11
		at 600V	A	11
Yielded mechanical performance				
	for single-phase AC motor			
		110/120V	HP	1
		230V	HP	2
	for three-phase AC motor			
		200/208V	HP	5
		220/230V	HP	5
		460/480V	HP	7.5
		575/600V	HP	10
General USE				
	Contactor			
		AC current	A	28
Short-circuit protection fuse, 600V				
	High fault			
		Short circuit current	kA	100
		Fuse rating	A	30
		Fuse class		J
	Standard fault			
		Short circuit current	kA	5
		Fuse rating	A	70
Ambient conditions				
Temperature				
	Operating temperature			
		min	°C	-50
		max	°C	70
	Storage temperature			
		min	°C	-60
		max	°C	80
Max altitude			m	3000
Resistance & Protection				
Pollution degree				3
Dimensions				

The characteristics described in this document are subject to updates or modifications at any time. The descriptions, technical and functional information, illustrations and instructions in this brochure are purely illustrative, and are consequently not contractually binding

BF12T4A04860

FOUR-POLE CONTACTOR, IEC OPERATING CURRENT ITH (AC1) = 28A, AC COIL 60HZ, 48VAC

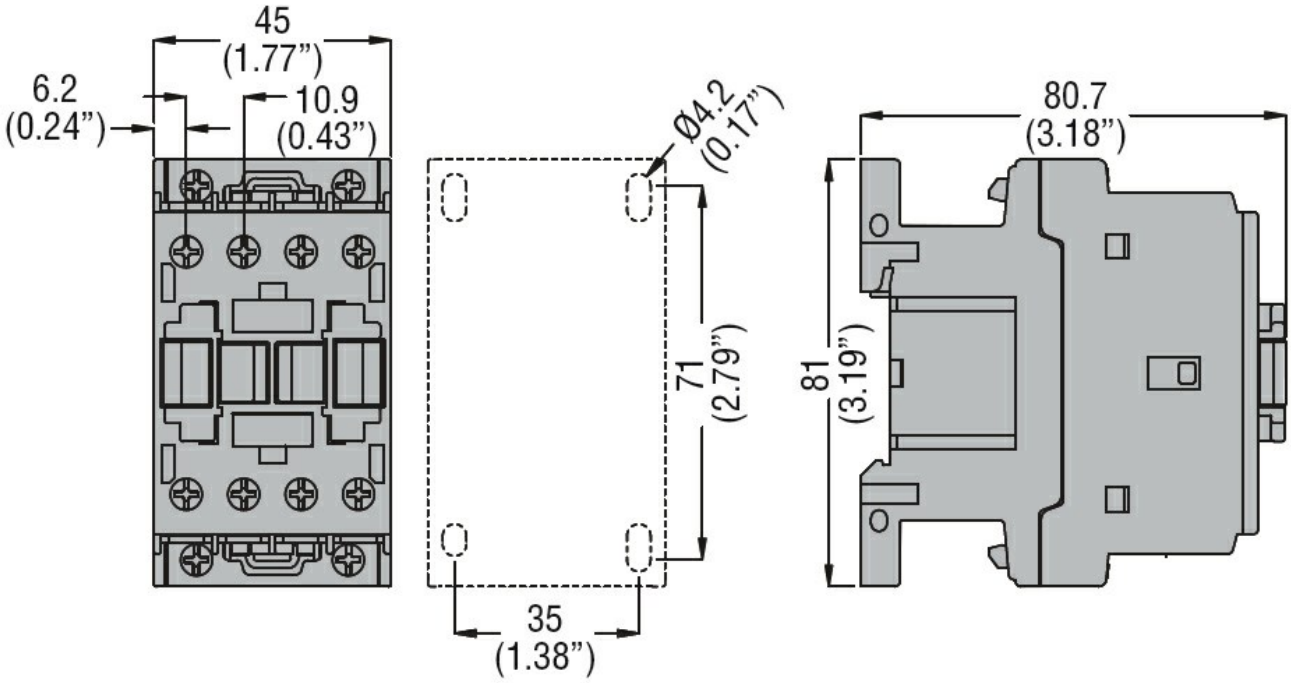

Wiring diagrams

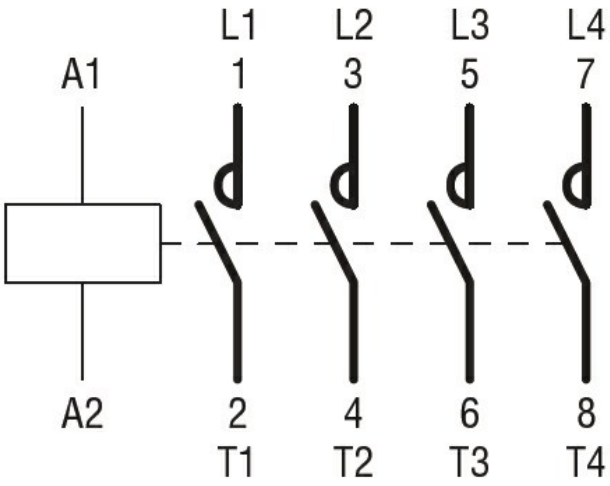

Certifications and compliance

Compliance

CSA C22.2 n° 60947-1
CSA C22.2 n° 60947-4-1
IEC/EN/BS 60947-1
IEC/EN/BS 60947-4-1
UL 60947-1
UL 60947-4-1

Certificates

CCC
cULus
EAC

ETIM classification

ETIM 8.0	EC000066 - Power contactor, AC switching

The characteristics described in this document are subject to updates or modifications at any time. The descriptions, technical and functional information, illustrations and instructions in this brochure are purely illustrative, and are consequently not contractually binding