MP5000 Series Modular Precision Test System

DATASHEET



The Tektronix MP5000 Modular Precision Test System accommodates all your sourcing and measuring needs within a 1U rack space. This top-tier automated test equipment (ATE) optimizes rack space by incorporating multiple source measure units (SMUs) and power supply units (PSUs) with adaptable module options. Featuring three slots and dual-channel modules, it offers up to six parallel channels. For higher channel count applications, TSP-Link™ provides a solution to connect mainframes in a master-subordinate configuration, effectively allowing them to function as one unit. This facilitates the creation of an optimized source and measurement system suitable for a wide range of applications, from validating design to creating complex parallel test systems.

Customers can mix and match modules to optimize cost, throughput, and accuracy. For applications where low current measurements and sinking capabilities aren't required, power supplies can be a cost-effective solution. For applications in which true current sourcing and high-speed measurements are required, consider an SMU module. The system supports a wide array of applications and its high-density design conserves valuable rack space and reduces cost per channel. It's engineered to deliver fast throughput for high-channel parallel testing, saving both cost and time for production and validation test users

With its ongoing module release cadence, the MP5000 is positioned to support evolving test requirements and consistently align with customer needs.



Figure 1: MP5000 Modular Precision Test system

MP5103 Mainframe

MP5103 System Features

The Tektronix MP5103 Modular Precision Test System offers designers the flexibility to configure test setups by combining SMU and PSU modules to meet specific requirements. Engineers can choose high-performance channels for applications demanding speed and accuracy or opt for basic channels for straightforward DC power needs.

This compact 1U mainframe offers significant space and cost efficiency over conventional rack-and-stack systems.

Maximum Flexibility in Minimal Rack Space

The MP5103 is engineered to fit within a standard 1U rack space. It features three modular slots that allow easy insertion and removal of modules without requiring the mainframe to be removed from the test rack. Side-mounted air vents enable efficient cooling and support vertical stacking of multiple units.

Available PSU and SMU modules offer 2 channels per module and up to 6 channels in the 1U mainframe. This is an increase in density compared to traditional SMU and PSU benchtop instruments.



Figure 2: Rear View of MP5103 highlighting three module slots and simple module insertion and removal

TriggerFlow™ Building Blocks and TSP-Link™ for Instrument Control and Parallel Execution

The TriggerFlow trigger model on the MP5000 is a powerful and flexible way to control source and measurement sequences and instrument behavior—almost like building a flowchart for your test logic.

TriggerFlow lets you define how and when the MP5000 should change the source level, take measurements, respond to events, or coordinate with other instruments and test tools, such as probers and handlers. It's especially useful for automating complex test procedures with minimal operation from a PC.

TSP-Link is a high-speed communication and synchronization bus developed by Tektronix for automated test systems. It enables seamless connectivity between multiple TSP-enabled instruments, making it ideal for high-channel-count configurations. MP5000 users can use TSP-Link to synchronize channels with precision down to 500 nanoseconds.

Target Applications

- VCSEL Module Characterization and Functional Test
- Semiconductor Device Characterization and Functional Test
- Stress Testing and Validation
- Laser/Module Characterization for Optical Transceivers
- LED Characterization
- Silicon Photonics

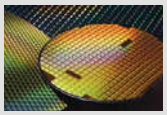



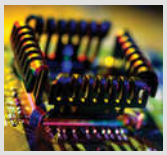

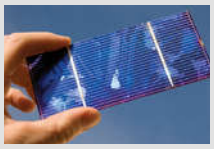



Measurement Control at your Fingertips or Online

The MP5103 features an intuitive touch display for simplified operation, enabling fast setup and efficient troubleshooting. The integrated web UI allows users to remotely monitor or control PSU and SMU channels using a modern web browser.

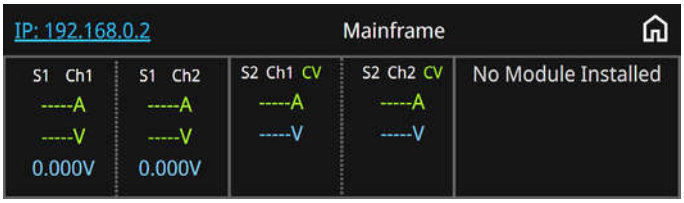

Figure 3: Touch Display Mainframe View

Communication Interface Built for Speed

The MP5103 features USB 3.0 and 10/100/1000 Base-T Ethernet LAN interfaces, designed to deliver high-speed performance and user-friendly access through widely adopted industry standards. It is fully LXI compliant.



Figure 4: Rear View showing LAN, USB 3.0, and TSP-Link connections

Robust Security You Can Trust

Safeguard your system with password protection for LAN-based communication protocols, ensuring only authorized access to your test environment. For added control, users can selectively disable communication protocols, tailoring security to meet the demands of even the most sensitive applications.

SMU Module

Source Measure Unit

A Source Measure Unit (SMU) is a highly versatile electronic instrument used to characterize electrical components and materials. From the research bench to the production floor, SMUs are built to address your most complex testing needs. It acts as a precision power supply, a true current source or an electronic load while measuring voltage and current at the same time.

The Tektronix modular SMU optimizes ATE testing workflow by providing high precision in a dense form factor:

- **Scalable channel per pin testing:** Modular SMUs allow you to expand as many channels as needed for high pin count devices
- **Fast Measurement:** Digitizing A/D converters ensure fast results in a time-sensitive production environment
- **Programmable Parallel Control:** Running multiple channels simultaneously is crucial for complex devices and high throughput

SMU Module Key Features & Benefits

- Up to 60 V or up to 1.5 A per channel for simultaneous sourcing and measurement
- Two channels per module means a rack utilization of four times that of traditional rack-and-stack SMUs
- 6½ digit resolution measures current down to 100 femtoamps
- 1 MSa/s measurement rate for transient capture
- 6 V max between force and sense for longer cable setups
- Independently programmable positive and negative limits offer flexibility in the amount of current to allow when sourcing versus sinking

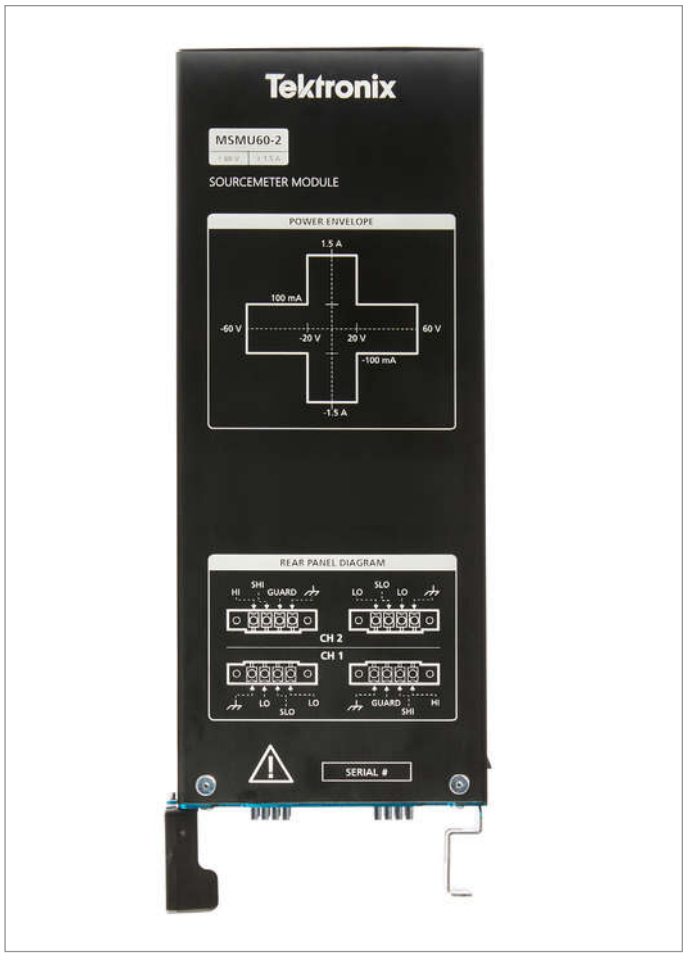

Figure 5: MSMU60-2 Module: Dual Channel SMU

Accelerate Test Throughput

Unlock high-speed insights with the MSMU60-2's advanced digitizing capabilities of 1MSa/sec, enabling **simultaneous current and voltage measurements** to detect fast transient events with precision.

The MSMU60-2 SMU supports basic sweep functionality including linear, log and list sweeps to help the user quickly generate basic I-V curves. For more advanced sequences, leverage **Configuration Lists** to sequence through changes in source function, limit values or other source and measure parameters. The SMU automatically optimizes the transition between the setups to maximize your test throughput.

Enhanced Remote Sense Features & Input Protection

Safeguard your probes, devices, and instrumentation with advanced protection features designed for high-performance testing environments.

- **Input overvoltage protection** protects the SMU from damage from high-voltage signals at its input terminals. This can be helpful when a high-voltage SMU or current-limited power supply is connected to another terminal of the device, such as during breakdown voltage testing. Input overvoltage protection minimizes the need for external protection modules and safeguards your instrumentation investment.
- **A maximum force-sense voltage of 6 V** expands the remote sense voltage from the previous generations of SMU instruments. This expanded voltage enables greater flexibility in cabling as well as more voltage for custom components in series with the device under test (DUT).
- **Optional Autosense Capability:** Switch in autosense resistors to maintain a feedback path for the voltage source when remote sense is enabled. This keeps the voltage at the DUT within an expected range even in the event of improperly connected or disconnected sense leads.

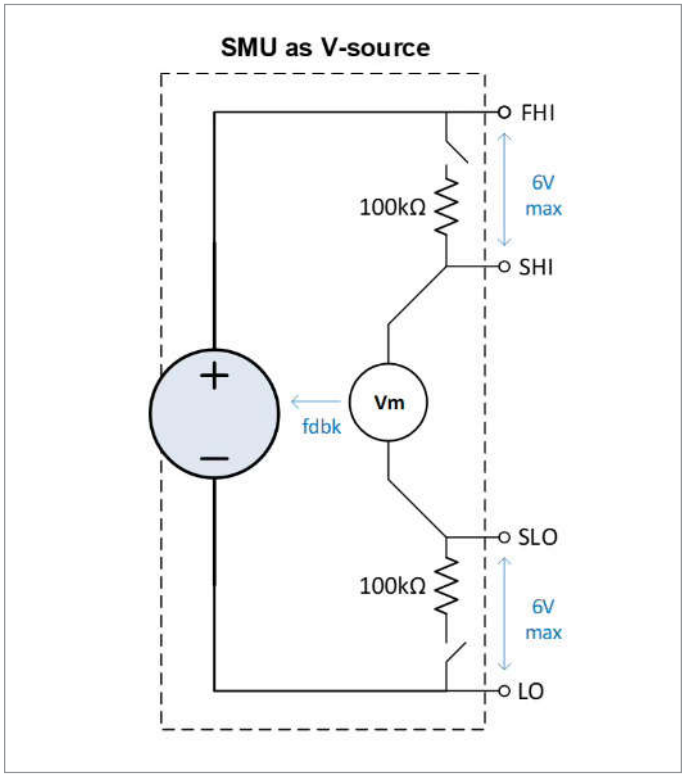

Figure 6: Optional Autosense Resistors in both Source modes

- **Contact Check is built into the hardware and offers an automated way to check proper connection to the DUT before the test is performed**. In the MSMU60-2, contact check is designed to minimize disturbance to the DUT and offer reliable detection under a variety of sense lead connections.

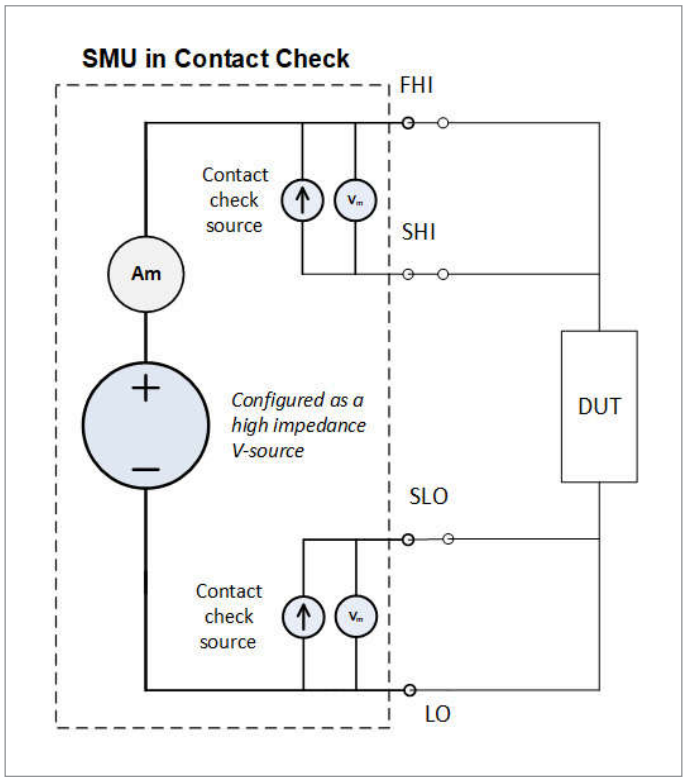

Figure 7: Contact Check Circuit Representation

Asymmetric Limits Enables "Smart" Current Sinking

When using an SMU as a load for testing power management ICs or sensitive voltage regulators, it's crucial to manage current limits differently for sourcing and sinking. Traditional SMUs with symmetrical limits often require custom control algorithms to prevent damage to the DUT. The Model MSMU60-2 simplifies this process by allowing users to program distinct positive and negative current limits, enabling automatic ("smart") management of sourcing and sinking behavior. This not only streamlines development workflows but also enhances protection for delicate power management components.

PSU Module

DC Power Supply

A DC power supply delivers stable, adjustable voltage and current for testing, prototyping, and manufacturing.

The Tektronix modular PSU is a specialized ATE power supply designed for high-speed, high-volume electronics testing, especially in production and validation environments.

- **Precision & Programmability:** They deliver tightly controlled voltage and current with fast response times, ideal for simulating real-world conditions during device testing.
- **High Throughput:** Optimized for rapid test cycles, reducing downtime and increasing efficiency on production lines.
- **Scalability:** Modular power supplies allow engineers to scale systems based on channel count or power requirements.



Figure 8: MP5000 System is ideal for ATE

PSU Module Key Features & Benefits

- 50 V and 5 A per channel for independent device control
- 2 channels per module for saving rack space
- 100 V or 10 A series or parallel stacking to cover a wide range of applications
- ± 50 V bipolar output without swapping leads
- < 50 µs turn off time protects devices from over current and voltage
- 4-wire sense ensures accurate voltage at the device terminals



Figure 9: MPSU50-2ST Module: Dual Channel PSU

Enhanced Safety with OVP & OCP

Overvoltage Protection (OVP): When voltage spikes threaten your sensitive components—like microprocessors, memory, or sensors—our OVP reacts in under **50 microseconds**. Paired with the output disconnect relay, it instantly disconnects the output to prevent damage. It's fast, reliable, and built to protect what matters most.

Overcurrent Protection (OCP): Keep your system safe from excessive current draw with real-time monitoring across each output rail. If current exceeds safe limits, OCP steps in to shut down the output in less than **50 microseconds**—preventing **overheating, cable damage, and short-circuit risks** before they escalate.

Together, OVP and OCP deliver **fail-safe confidence** for high-stakes testing environments—so you can push performance without compromising safety.

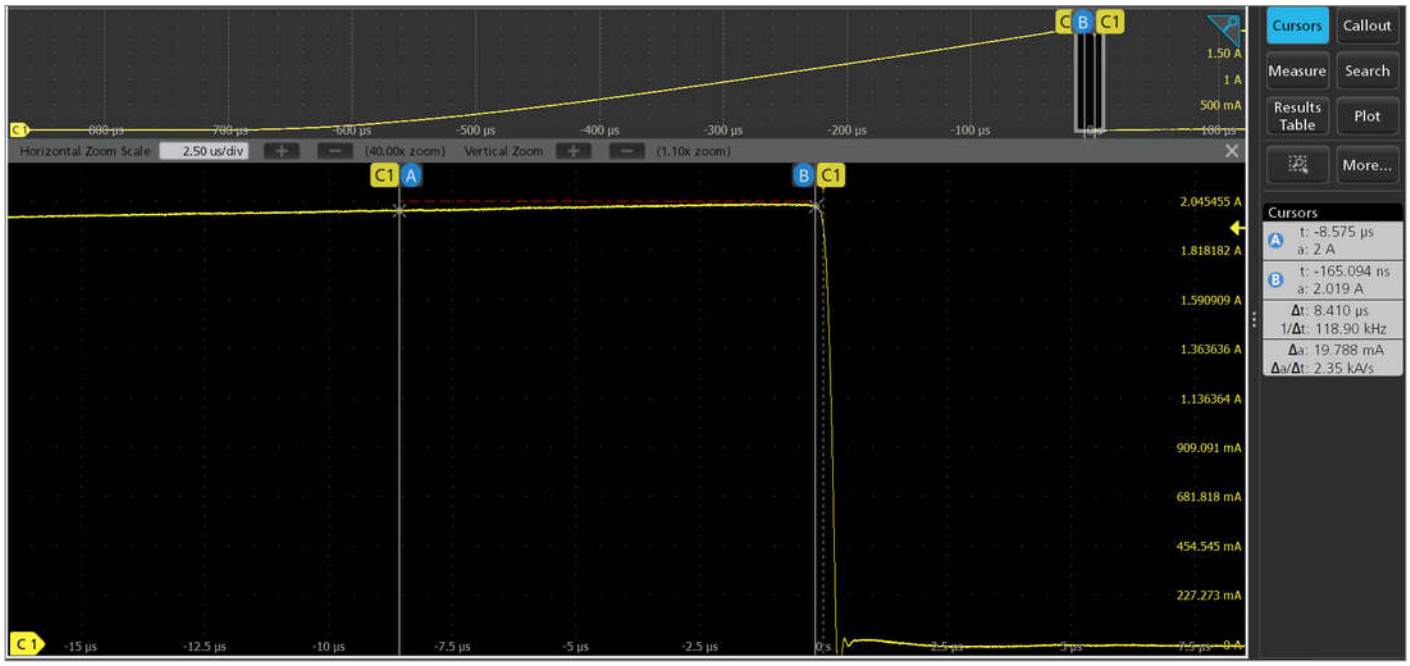

Figure 10: MPSU50-2ST OCP Response Time <50usec

The solid-state **output disconnect relay** in the PSU module is a safety and control feature that allows the output terminals to be **physically disconnected** from the load under certain conditions at very fast response < 50 *µsec*.

What It Does

- **Physically isolates** the output from the load when the power supply is turned off or in fault mode.
- **Prevents unwanted current** flow during startup, shutdown, or emergency conditions.

Why It's Useful

- Supports **automated testing** by allowing precise control over when power is applied or removed.
- Enhances **system safety** by ensuring complete isolation during faults or shutdowns.

Bipolar capability: Seamless Polarity Swapping

Experience true versatility with bipolar output capability, delivering both positive and negative voltages from a single set of terminals, with no manual rewiring or polarity switching required. Say goodbye to external relays and complex setups. This streamlined design dramatically reduces test time and simplifies wiring.

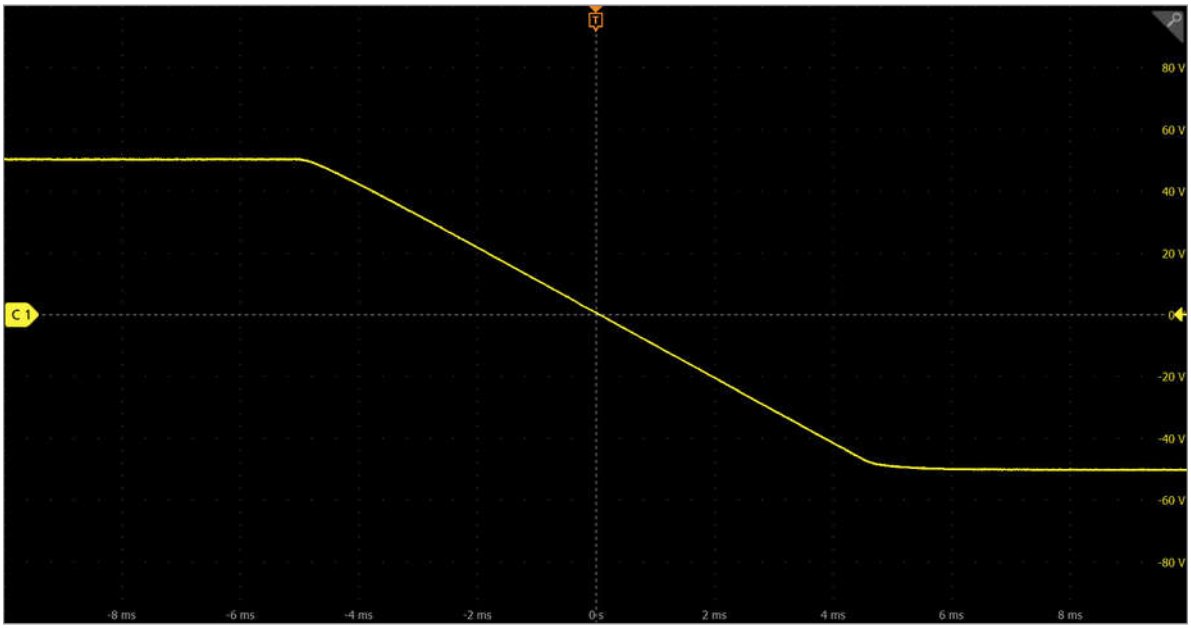

Figure 11: MPSU50-2ST Bipolar Capability

4-Wire Sense and Current Readback

4-Wire sense, also known as remote sense, is a powerful feature that dramatically improves voltage accuracy at the load. It compensates for voltage drops across long load wires. It ensures the voltage measured and regulated is exactly what the DUT receives, not just what's at the supply terminals.

Current readback on a power supply delivers real-time visibility into how much current your (DUT) is actually drawing. It's not just about monitoring—it's about precision, protection, and performance.

The PSU modules support two modes for current readback, a normal mode and a fast mode where the users can capture close to 400 readings per second.

Test Automation

Intuitive Web Interface: Visual Control at Your Fingertips

Experience effortless control with our highly visual, interactive web interface, purpose-built for streamlined troubleshooting and real-time monitoring of multi-channel setups. It can be accessed through any modern web browser. Whether you're managing instruments remotely or optimizing complex configurations, this interface delivers clarity, speed, and precision with every click.

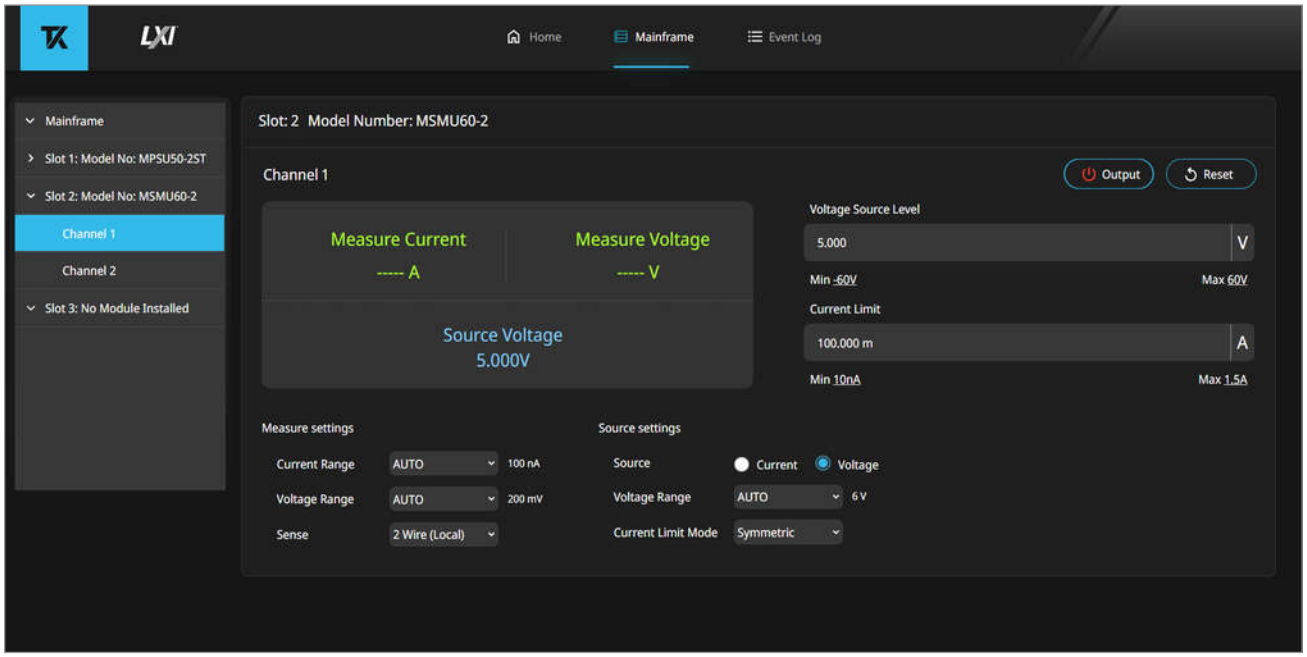

Figure 12: Web Interface for SMU Control

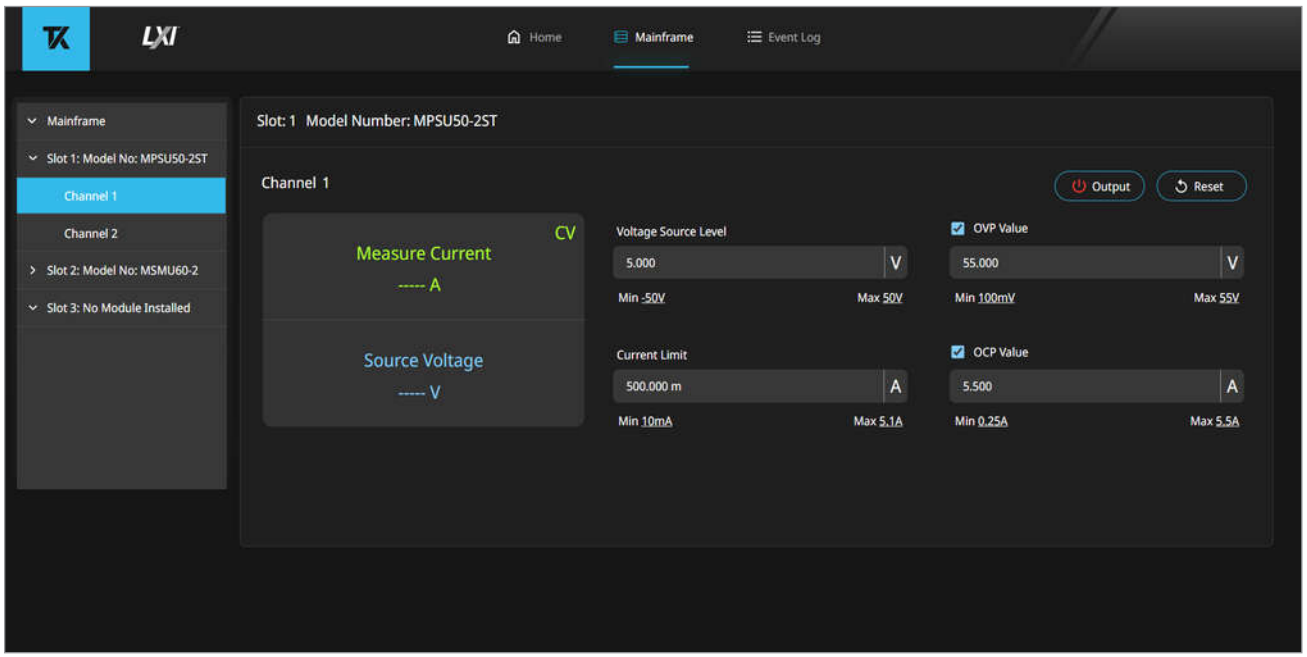

Figure 13: Web Interface for PSU Control

Build Smarter Test Strategy with On-Instrument Processing

The MP5000—along with supported SMUs and PSUs—features an embedded test script processor (TSP™), purpose-built for fast, scalable automation. With TSP, you're not just reducing test time—you're building a smarter test strategy.

- Easy Automation – Human-readable TSP commands make scripting intuitive for both beginners and experts.
- Modular & Scalable – Define custom APIs with script loading and function encapsulation for reusable, maintainable code.
- Accelerated Execution – Run full test routines directly on the instrument, eliminating PC-instrument latency.
- Precision Synchronization – TSP-Link™ enables sub-microsecond coordination across MP5000 mainframes for high-speed parallel testing.

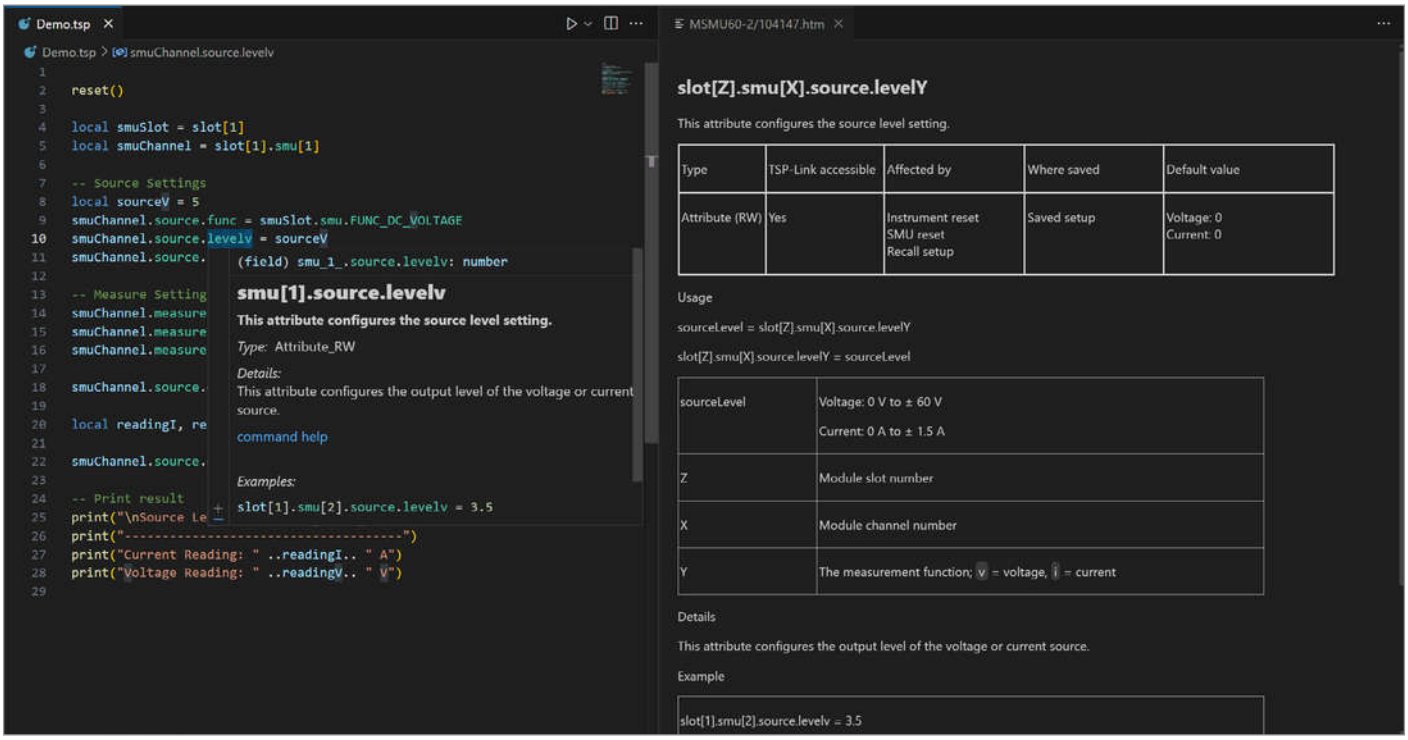

Figure 12: TSP Toolkit Script Development Environment in Visual Studio Code

Automate Your Way—From Code to No-Code Options

The MP5000 supports multiple automation paths to integrate with and expedite your workflow:

- Driver-Based Automation – Use our Python driver, tm_devices beta, for flexible, code-driven control. (IVI.NET is available now. IVI-C, and LabVIEW drivers are coming soon.)
- TSP Toolkit – Free Visual Studio Code extension built for easy TSP scripting with autocomplete, syntax validation, and an on-instrument debugger for live script monitoring.
- No-code Automation - Automated Characterization Suite (ACS) Software will allow users to build semiconductor characterization test sequences without writing code.

Specifications

All specifications are subject to change without notice.

MP5103 Mainframe

Specifications and supplemental information for the MP5000 Series Modular Precision Test System Model MP5103. Specifications are the standards against which Model MP5103 is tested. Upon leaving the factory, the MPS5103 meets these specifications. Supplemental and typical values are non-warranted, apply at 23 °C, and are provided solely as useful information.

Overview

Model	Description	Output Power
MPS5103	MP5000 Series, 3-Slot low profile modular mainframe	600 W

Supported Module Plug-in Instrument Cards

Model	Description
MPSU50-2ST	MP5000 PSU Module, 50 W, 50 V, 5 A, 2 channels, Standard Power Supply
MSMU60-2	MP5000 SMU Module, 30 W, 60 V, 1.5 A, 2 channels

General

USB Host (Front Panel)	USB 2.0, Type A, support for flash drives. Support FAT32 & exFAT formats. **Capability:** Support Firmware Upgrades
USB Device (Rear Panel)	USB 3.0, Type C, USBTMC
Ethernet	**RJ-45 Connector:** 10/100/1000BASE-T **IP Configuration:** static or DHCP (manual or automatic)
IEEE-488.2	Supports IEEE Std 488.2 common commands and status model topology.
Programming	Embedded Test Script Processor (TSP) scripting engine is accessible from any host interface: • Responds to individual instrument control commands. • Responds to high-speed test scripts comprised of remote commands and test script language (TSL) statements (for example, branching, looping, and math) • Able to execute high-speed test scripts stored in memory without host intervention.
Real Time Clock	1 year time frame for data retention
Memory (user scripts only)	256 MB (approximately 4 million lines of code)
Front Panel Display	Multi-Touch Capacitive Touchscreen **Resolution:** 480×128 RGB TFT
Additional Control	Rotary Navigation/Control Knob with Encoder Selection
Security Password Protection	24 Characters
Triggering	**Application:** DIGIO & TSP-Link **Input Level:** TTL **Input Transition Timing, Max**: < 100 ns **Trigger In to Trigger Out:** 0.5 µs **Trigger Timer Accuracy:** ±200 ns
Acoustic Noise	Sound Pressure Lp, <70 dB(A), at 1 meter, open air
LXI Compliance	Version 1.6 LXI Device Specification 2023 compliant
Power Supply	100 to 240 VAC, 50–60 Hz (auto sensing), 1000 VA maximum

EMC	Conforms to European Union EMC Directive.
Safety	Conforms to European Union Low Voltage Directive. NRTL Listed to 61010-1
Environmental	Conforms to European Union RoHS Directive
Dimensions	1.73 in (44 mm) Height × 19.00 in (483 mm) Width × 24.6 in (624 mm) Depth
Weight	28 lbs. (12.8 kg)
Environment	For indoor use only **Altitude:** Maximum 6562 ft (2000 m) above sea level **Operating:** 0 °C to 50 °C, Max 70% relative humidity. See module specs for additional operating requirements **Storage:** -25 °C to 65 °C
Warranty	1 Year Standard Warranty
Digital I/O Interface	**Connector:** 30-pin female Terminal (Samtec TFM Series). **Input/Output Pins:**18 Bi-directional I/O. **5V Power Supply Pins:** 3x Limited to 600 mA @ >4 V, solid state fuse protected. **Ground Pins:** 6x
Digital I/O Pins 1-18	
ISINK, max. per pin	250 mA
ISOURCE, max. per pin	2.0 mA
Absolute VIN	5.25 V to -0.25 V Vext ➔ 5 V to 33 V
VIH Min	3.7 V
VIL Max	0.7 V
VOL Max at 5 mA Isink	0.7 V
VOL Max at Isink max	2.7 V
VOH Min, 0.4 mA source	2.4 V

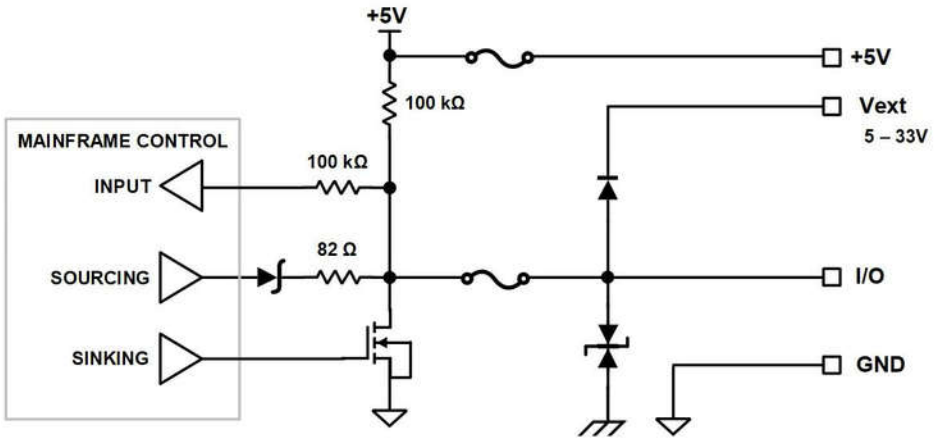

	Pins
5V Supply	8, 16, 24
Ground	3, 4, 11, 19, 27, 28
Vext	1
Bidirectional I/O	2, 5, 6, 7, 9, 10, 12, 13, 14, 15, 17, 18, 20, 21, 22, 23, 25, 26
Reserved	29, 30

System Expansion through TSP Link

The TSP-Link expansion interface allows TSP-enabled instruments to trigger and communicate with each other. See the figure below.

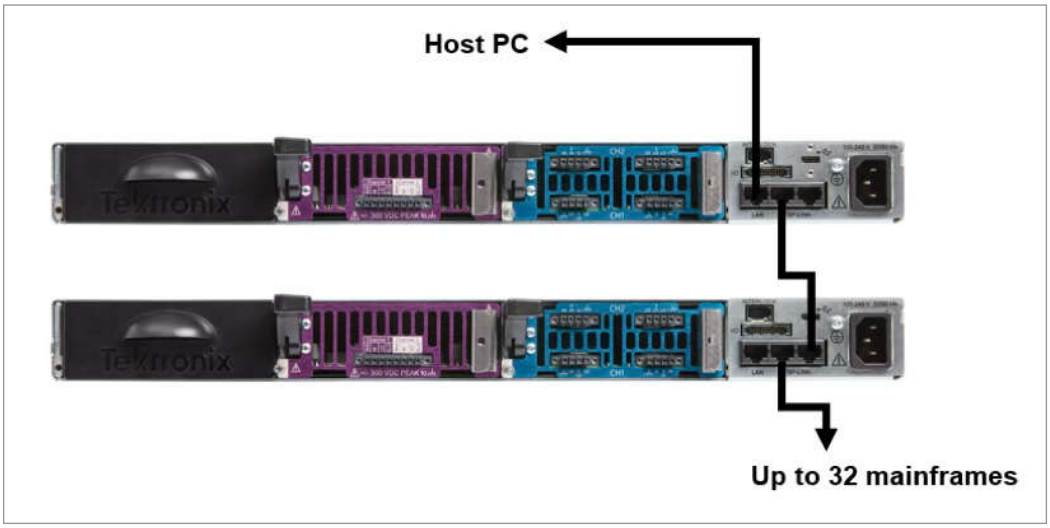

Figure 13: Scaling MP5000 with TSP-Link

Mainframe has two TSP-Link connectors to make it easier to connect instruments in a sequence.

- Once channels are interconnected through the TSP-Link expansion interface, a computer can access all of the resources of each channel through the host interface of any MP5103 mainframe
- A maximum of 32 TSP-Link nodes can be interconnected. Each Model MP5103 mainframe uses one TSP-Link node

MSMU60-2 Specifications

Specifications and supplemental information for the Dual Channel Model MSMU60-2 SMU Module. Specifications are the standards against which the Model MSMU60-2 is tested. Upon leaving the factory, the Model MSMU60-2 meets these specifications. Supplemental and typical values are non-warranted, apply at 23 °C, and are provided solely as useful information.

Source and measurement accuracies are specified at the terminals of the MSMU60-2 module under these conditions when installed in the MP5000 Series Mainframe:

1. Ambient 23 °C ± 5 °C, < 70 percent relative humidity.
2. After a 30-minute warm-up period
3. Integration time setting is 1 NPLC[1]
4. Remote sense operation or properly zeroed local operation
5. Calibration period: One year

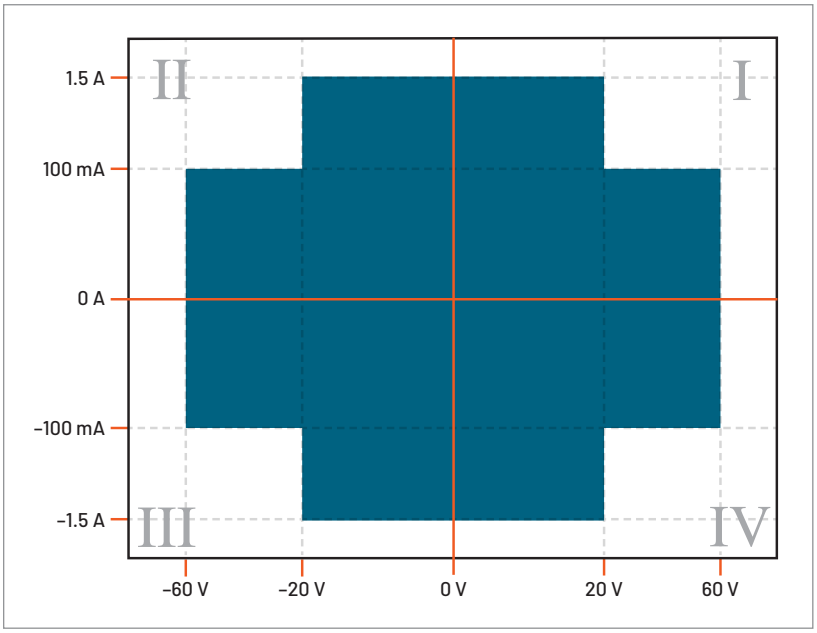

Figure 14: MSMU60-2 Power Envelope

Maximum Output Power and Source/Sink Limits[2]

30 W maximum per channel
±(60 V at 0.1 A)
±(20 V at 1.5 A)
Four-quadrant source or sink operation[3]

1. 1 PLC aperture reading is calculated from averaging samples taken at 1MSa/sec over a single cycle of the detected line frequency. For 60 Hz, this is an average of 16,667 samples; for 50 Hz power line frequency, this is an average of 20,000 samples.
2. Thermally limited in sink mode (quadrants 2 and 4).
3. Full power source operation regardless of load or number of channels used, to 30°C ambient temperature. When $T_{ambient}$ > 30°C or during power sink oepration, the unit may trigger over-temperature protection. See "Over-temperature Protection" in Additional Characteristics.

Voltage Accuracy Specifications[4]

Range	Source			Measure	
	Resolution	Accuracy ± (% reading + volts) 1 year	Typical Noise (Peak to Peak) 0.1 Hz to 10 Hz	Resolution	Accuracy ± (% reading + volts) 1 year
200 mV	5 µV	0.05% + 100 µV	2.5 µV	500 nV	0.05% + 100 µV
2 V	50 µV	0.02% + 300 µV	5 µV	5 µV	0.014% + 150 µV
6 V	50 µV	0.02% + 900 µV	15 µV	15 µV	0.015% + 420 µV
20 V	500 µV	0.02% + 2 mV	40 µV	50 µV	0.015% + 1.4 mV
60 V	500 µV	0.02% + 6 mV	115 µV	150 µV	0.015% + 4.2 mV

4. For temperatures 0 °C to 18 °C and 28 °C to 50 °C, accuracy is degraded by ± (0.15 × accuracy specification)/°C.

Current Accuracy Specifications[5]

Range	Source			Measure	
	Resolution	Accuracy ± (% reading + amps) 1 year	Typical Noise (Peak to Peak) 0.1 Hz to 10 Hz	Resolution	Accuracy ± (% reading + amps) 1 year
100 nA[5]	2 pA	0.2% +20 pA	600 fA	100 fA	0.15% + 20 pA
1 µA	20 pA	0.05% + 150 pA	10 pA	5 pA	0.025% + 100 pA
10 µA	200 pA	0.03% + 1 nA	40 pA	25 pA	0.025% + 1 nA
100 µA	2 nA	0.03% + 12 nA	950 pA	250 pA	0.025% + 12 nA
1 mA	20 nA	0.03% + 70 nA	3 nA	2.5 nA	0.03% + 60 nA
10 mA	200 nA	0.03% + 1.2 µA	140 nA	25 nA	0.02% + 1.2 µA
100 mA	2 µA	0.03% + 6 µA	500 nA	250 nA	0.03% + 6 µA
1 A	20 µA	0.05% + 1 mA	10 µA	2.5 µA	0.03% + 750 µA
1.5 A	200 µA	0.06% + 4 mA	20 µA	5 µA	0.05% + 3.5 mA

5. Derate measure accuracy by 8pA / V when $T_{ambient}$ > 28°C and RH > 50%.

Enhanced Current Accuracy Specifications[6]

(requires auto-cal (ACAL) procedure performed; applies with $T_{Ambient} = T_{ACAL} \pm 1°C$ and within 30 days of last ACAL)

Range	Source		Measure	
	Resolution	Accuracy ± (% reading + amps) 1 year	Resolution	Accuracy ± (% reading + amps) 1 year
1 µA	20 pA	0.05% + 80 pA	5 pA	0.025% + 80 pA
10 µA	200 pA	0.03% + 400 pA	25 pA	0.025% + 400 pA
100 µA	2 nA	0.03% + 8 nA	250 pA	0.02% + 8 nA
1 mA	20 nA	0.03% + 40 nA	2.5 nA	0.02% + 40 nA
10 mA	200 nA	0.03% + 800 nA	25 nA	0.02% + 800 nA
100 mA	2 µA	0.03% + 4 µA	250 nA	0.02% + 4 µA
1 A	20 µA	0.05% + 200 µA	2.5 µA	0.03% + 200 µA
1.5 A	200 µA	0.06% + 500 µA	5 µA	0.05% + 500 µA

6. When $T_{Ambient}$ is outside of 18 – 28 °C, then accuracy is degraded by (0.15 × accuracy specification)/°C (see footnote #4).

Digitizing Characteristics

Resolution	20 bits at 1 MSa/s
Measurement Input Coupling	DC coupled
Minimum Record Time	1 µs
Maximum Record Length	5 M readings/channel

Current and Voltage Measurement Noise vs. Aperture

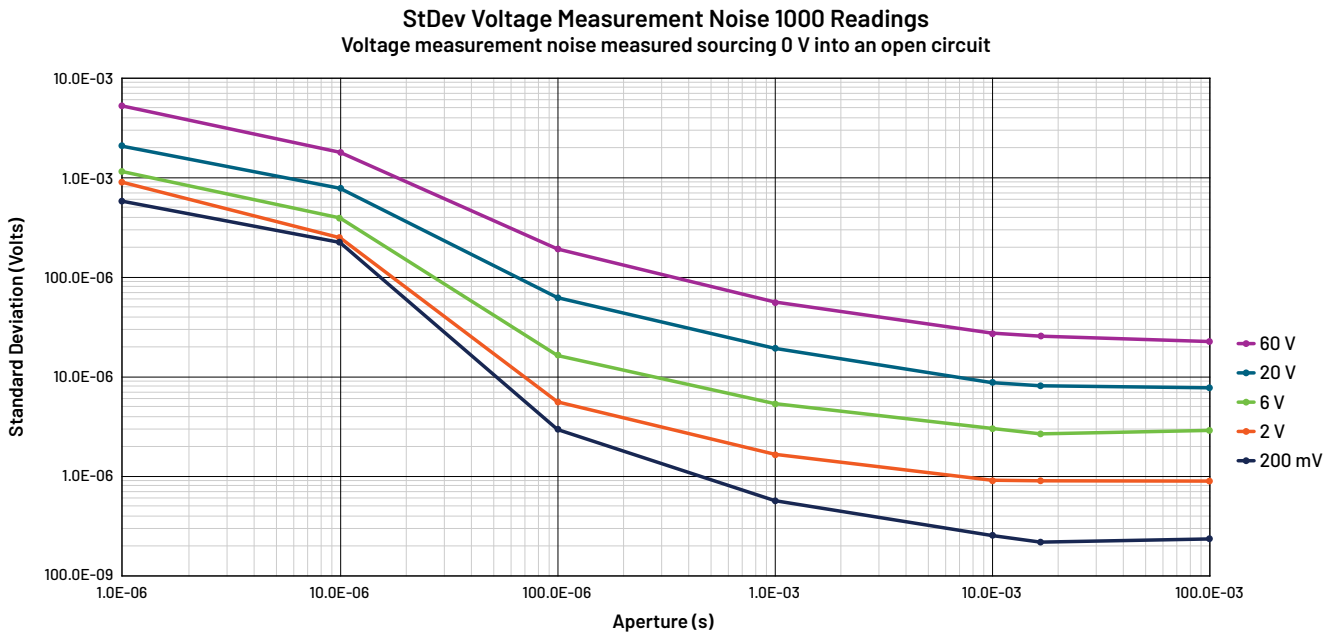

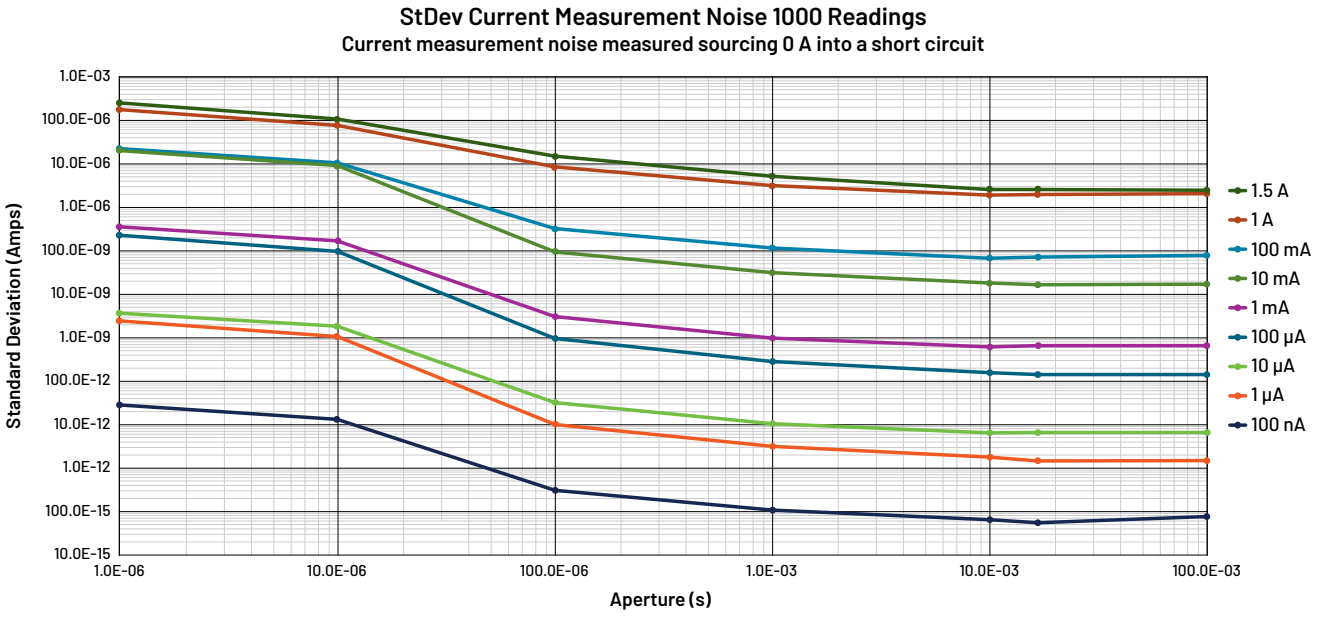

Pulse Specifications

Pulse widths[7] can be programmed using Delay blocks in the trigger model. However, the minimum achievable pulse width will vary with the source and measure ranges of the SMU as well as the impedance of the device under test. The following table represents a sampling of combinations to provide an indication of minimum achievable pulse widths.

Voltage Source			
Source Range	**Load**	**Source Settling**	**Minimum Pulse Width**
2 V	20 Ω	1%	160 µs
6 V	60 Ω	1%	200 µs
20 V	200 Ω	1%	200 µs
60 V	600 Ω	1%	230 µs
Current Source			
Source Range	**Load**	**Source Settling**	**Minimum Pulse Width**
100 mA	4 Ω	1%	160 µs
1 A	6 Ω	1%	260 µs
1.5 A	60 Ω	1%	350 µs

7. Pulse width is measured from the start of the pulse to the start of the off-time (when the source is returned to the bias level). See figure below:

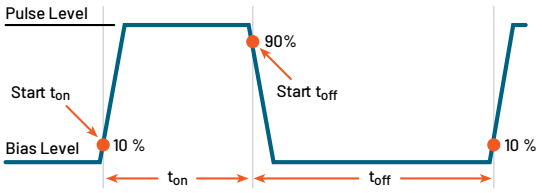

Additional Source Characteristics

Noise 20 Hz to 20 MHz	< 20 mV_{PP}
Transient Response Time	< 100 µs for the output to recover to within 0.1% for a 10% to 90% step change in load.
Load Regulation	**Voltage:** 0.5 mV per mA of output load using Local Sense **Current:** ± (0.01% + 15 pA) of range per volt of output change
Overshoot	**Voltage:** < ± (0.1% + 10 mV) • Step size = 10% to 90% of range, resistive load, maximum current limit/compliance **Current:** < ± 1.5% • Step size = 10% to 90% of range, resistive load
Range Change Overshoot	**Voltage:** < 300 mV + 0.1% of larger range[8] • Overshoot into a 200 kΩ load, 20 MHz bandwidth **Current:** < 400 mV/R_{load} + 5% of larger range
Guard Offset Voltage	< 1.5 mV + 0.1 Ω * I_{out} Measured at the output terminals of the SMU
Remote Sense Operating Range[9]	Maximum voltage between HI and SENSE HI = 6 V Maximum voltage between LO and SENSE LO = 6 V
Voltage Output Headroom	**60 V range** • Maximum output voltage = 72 V – (total voltage drop across source leads). Maximum 60 Ω source lead at max output current. **20 V range** • Maximum output voltage = 26 V – (total voltage drop across source leads). Maximum 2 Ω in source lead at max output current.

8. Except for a change from the 20 V to 60 V range where the overshoot is < 600 mV + 0.1% of the larger range.
9. Add 10 µV to source accuracy specifications per volt of HI lead drop.

Limit	Bipolar limit **Voltage:** Minimum value is 20 mV; accuracy is the same as the voltage source **Current:** Minimum value is 10 nA; accuracy is the same as the current source **Asymmetric Limit:** Independent positive and negative limits
Voltage Source Output Settling Time	Time required to reach within 0.1% of final value after source level command is processed on a fixed range. **200 mV range:**180 µs **2 V range:** 180 µs **6 V range:** 230 µs **20 V range:** 160 µs **60 V range:** 210 µs
Current Source Output Settling Time	Time required to reach within 0.1% of final value after source level command is processed on a fixed range Values below for $I_{out} \times R_{Load} = 2$ V **1.5 A range:** 210 µs **1 A range:** 170 µs **100 mA range:** 130 µs **10 mA range:** 165 µs **1 mA range:** 130 µs **100 µA range:** 235 µs **10 µA range**: 510 µs **1 µA range:** 4 ms **100 nA range:** 35 ms

Additional Characteristics

Maximum Load Capacitance[10]	100 nF (for voltage source ranges of ≥ 2 V and current limit and measure ranges of ≥ 1 µA)[11]
Common Mode Voltage	210 V DC
Common Mode Isolation	> 1 GΩ < 5 nF

Contact Check[12] **(measured resistance between SHI and Hi and between SLO and LO)**

Test Current: 30 µA (isolated current source in each sense lead)
Max Contact Resistance: 300 Ω

Measurement time	Accuracy (Typical)[13] ± (% reading + ohms)
< 5 ms (Normal)	5 % + 2.25 Ω[14]
< 15 ms (Slow)	5% + 2 Ω

Input Impedance	> 10 GΩ
Sense High Input Impedance	> 100 GΩ
Maximum Sense Lead Resistance	1 kΩ for rated accuracy
Overrange	101% of source range 102% of measure range
Over-temperature Protection	Internally sensed temperature overload puts the channel in standby mode.

10. Does not apply when slot[Z].smu[X].sense = slot[Z].smu[X].SENSE_AUTO.
11. 1 nF max on the 200 mV source range; 1 nF max when 100 nA measure range is enabled
12. Includes measurement of SENSE HI to HI and SENSE LO to LO contact resistances.
13. Applies when within 1 day and 1°C of the last contact check autozero. Add 0.25 Ω when source voltage range is 60 V.
14. Typical accuracy is ± 1.75 Ω when contact resistance is 0–10 Ω.

Input Overvoltage Protection

The input has overvoltage protection so that the SMU is protected in applications where device breakdown or other potential signal level failures could result in high voltage appearing at the SMU input terminal.

Trip Voltage

Input (HI to LO)	79 V minimum Limit current to 250 mA DC when triggered.
LO to Chassis	220V minimum Limit current to 1 A RMS when triggered.

Measurement Speed Characteristics

Maximum Sweep Operation Rates (operations per second) for 60 Hz (50 Hz):

A/D Converter Speed / Aperture	Trigger Origin	Source-Measure to Memory (using Trigger Model)
1 µs	Internal	10,000 (10,000)
1 µs	External	6100 (6100)
0.0001 PLC	Internal	10,000 (10,000)
0.0001 PLC	External	6100 (6100)
0.001 PLC	Internal	10,000 (10,000)
0.001 PLC	External	6100 (6100)
0.01 PLC	Internal	4200 (3700)
0.01 PLC	External	4100 (3700)
0.1 PLC	Internal	570 (480)
0.1 PLC	External	550 (450)
1 PLC	Internal	59 (50)
1 PLC	External	40 (40)

Maximum Single Measurement Operation Rates (operations per second) for 60 Hz (50 Hz):

A/D Converter Speed / Aperture	Trigger Origin	Measure to USB
1 µs	Internal	2700 (2700)
0.0001 PLC	Internal	2700 (2400)
0.001 PLC	Internal	2700 (2400)
0.01 PLC	Internal	2200 (2000)
0.1 PLC	Internal	500 (400)
1 PLC	Internal	59 (49)

Measurement Range Change Rate[15]	> 600 ranges/sec (measured when switching from 1.5 A range to 100 nA range)
Source Range Change Rate[15]	> 200 ranges/sec (measured when switching from 1.5 A range to 100 nA range)
Source Function Change Rate[15]	> 1000 operations/sec (assuming measure range and limit range are equivalent)

15. Results measured using commands sent via USB communication.

Triggering and Synchronization Characteristics

Trigger In to Source Change	< 8 µs
Multi-node Synchronized Source Change[16]	< 0.5 µs
Single-node synchronized source change[16]	< 0.5 µs

16. Fixed source range with no polarity change. Measured between any two channels of MSMU60-2.

General Specifications

Warranty	1 year standard warranty
EMC	Conforms to European Union EMC Directive
Safety	NRTL listed to UL61010-1 Conforms to European Union Low Voltage Directive
Environment	Conforms to European Union RoHS Directive For indoor use only **Altitude:** Maximum 6562 ft (2000 m) above sea level **Operating:** 0 °C to 50 °C[17], 70 % relative humidity up to 35 °C. Derate 3 % relative humidity/°C, 35 °C to 50 °C **Storage:** -25 °C to 65 °C 17. Operating temperature limited to 30°C when current source or current limit range is ≥1 A.
Dimensions	1.56 in (39.6 mm) height × 4.42 in (112 mm) width × 12.3 in (312 mm) length
Weight	2.75 lbs. (1.25 kg)

MPSU50-2ST Specifications

Specifications and supplemental information for the Dual Channel Model MPSU50-2ST Power Supply Module. Specifications are the standards against which the Model MPSU50-2ST is tested. Upon leaving the factory, the Model MPSU50-2ST meets these specifications. Supplemental and typical values are non-warranted, apply at 23 °C, and are provided solely as useful information.

Source and measurement accuracies are specified at the module terminals under these conditions when installed in the MP5000 Series Mainframe:

1. Ambient 23 °C ± 5 °C, < 70% percent relative humidity
2. After a 30-minute warm-up period
3. Remote sense operation or properly zeroed local operation
4. Calibration period: One year

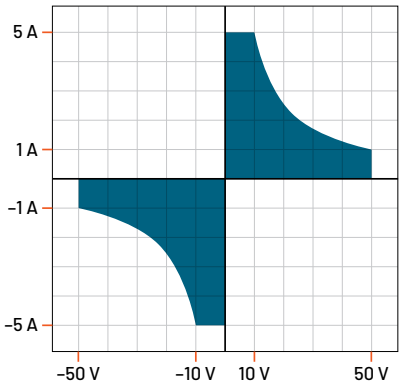

Figure 15: MPSU50-2ST Power Envelope

Maximum Output Power And Source Limits

50 W maximum per channel
±(50 V at 1 A)
±(10 V at 5 A)

Source Accuracy Specifications

		Setting (Programming)		Readback (Measurement)	
	Output	Resolution	Accuracy ± (% reading + offset) (23°C ± 5°C)	Resolution	Accuracy ± (% reading + offset) (23°C ± 5°C)[18]
Voltage	-50 V to 50 V	1 mV	0.1% + 20 mV	5 mV	0.1% + 20 mV
Current	0 A to 5 A	1 mA	0.1% + 20 mA	3 mA	0.1% + 5 mA

Voltage Limit 50.1 V

Load Effect (Regulation)

Voltage ±(0.01% + 4 mV)
Current ±(0.01% + 2 mA)

Ripple and Noise (Typical) (20 Hz to 20 MHz, 23°C ± 5°C)[19]

Voltage (V_{p-p}) ≤ 20 mV_{p-p}
Voltage (V_{RMS}) ≤ 5 mV_{RMS}
Current (I_{RMS}) (CC Mode) 4 mA_{RMS}

18. Readback measurement: 10 measurements taken using normal measure rate.
19. Noise: See performance verification manual for detailed measurement setup.

Supplemental Characteristics

Programming Ranges	
Voltage	0 V to ± 50.1 V
Current	10 mA to 5.1 A
Programming Temperature Coefficient per Deg C	
Voltage	± (0.005% + 0.2 mV)
Current	± (0.005% + 0.1 mA)
Measurement Temperature Coefficient per Deg C	
Voltage	± (0.01% + 0.2 mV)
Current	± (0.01% + 0.1 mA)
Additional Offset at Faster Measurement Settings	
Fast (Volt)	10 mV
Fast (Current)	50 mA
Common Mode Current Noise (20 Hz to 20 MHz)	
RMS	< 1 mA
peak-to-peak	< 10 mA
Overvoltage Protection (OVP)	
Setting Accuracy	± (0.25% + 400 mV) at ≤ 1 A[20]
Setting	100 mV to 55 V
Response Time[21]	< 50 µs[22]
Overcurrent Protection (OCP)	
Setting Accuracy	± (1%+ 20mA)
Setting	250 mA to 5.5 A
Response Time[21]	< 50 µs
Overtemperature Protection (OTP)	Internally sensed temperature overload puts unit in standby mode
Programmable Slew Rate with a full resistive load (10% to 90%)[23]	
Rising V / Falling V	Max 10kV / sec
Rising V / Falling V	Min 1V/ sec
Load Transient Recovery Time within settling band ± 0.3 V from load step	
50% to 100%	< 0.5 ms
Command Processing Time	< 1 ms
Sinking Capabilities	
Continuous DC Max Current	0.1 A ± 10%
Common Mode Voltage Rating	Up to 250 V (DC + peak AC) between HI and protective earth (safety ground) Up to 200 V (DC + peak AC) between LO and protective earth (safety ground)
Common Mode Isolation	>1 GΩ and ≤110 nF
Max Capacitance Loading	4700 µF

20. Greater than 1 A add additional 350 mV offset.
21. Time from OVP/OCP event to start of output turn off.
22. Response time achieved from min to max tolerance of OVP setting and max slew rate.
23. Max slew rate is specified stepping from 0V to ± full-scale with a 1 A current limit and a load >65 Ω.

Measurement Speed Characteristics

Maximum Sweep Operation Rates (operations per second) for 60 Hz (50 Hz)

A/D Converter Speed[24]	Trigger Origin	Source Measure to Memory (Trigger model)
Fast	Internal	462 (461)
Fast	External	453 (433)
Normal	Internal	15 (15)
Normal	External	14 (14)

Maximum Single Measurement Rates (operations per second) for 60 Hz (50 Hz):

A/D Converter Speed	Trigger Origin	Measure to LAN	Source Measure to LAN
Fast	Internal	311 (312)	311 (311)
Normal	Internal	15 (15)	15 (15)

24. Measure rate conditions:
    - Relative Measurements Disabled
    - Temperature Compensation Enabled
    - Slew Rate set to maximum (10 kV / sec)

Triggering and Synchronization Characteristics

Trigger In to Source Change	< 50 µs
Multi-node Synchronized Source Change (between similar PSU models[25])	< 0.5 µs
Single-node Synchronized Source Change (between similar PSU models[25])	< 0.5 µs

25. Measured between any two channels of MPSU50-2ST

General Specifications

Rear-Panel Connector	**Output:** 8-pin terminal block socket
Output and Remote Sense	Removable 8-8 pin screw-terminal block carries the following signals: • Output Channels • Max voltage drop across source leads: 1 V per lead • Max source lead resistance: 0.5 Ω • Max sense leads resistance: 2 Ω • The load lead drop reduces the maximum available voltage at the load • Remote Sense Lines: Connections for remote sense for each channel
Warranty	1 year standard warranty
EMC	Conforms to European Union EMC Directive
Safety	NRTL listed to UL61010-1 Conforms to European Union Low Voltage Directive
Environment	Conforms to European Union RoHS Directive For indoor use only **Altitude:** Maximum 6562 ft (2000 m) above sea level **Operating:** 0 °C to 50 °C, 70 % relative humidity up to 35 °C. Derate 3 % relative humidity/°C, 35 °C to 50 °C **Storage:** -25 °C to 65 °C
Dimensions	1.56 in (39.6 mm) height × 4.42 in (112 mm) width × 12.3 in (312 mm) length
Weight	2 lbs. (0.9 kg)

Ordering Information

MP5103	**MP5000 Series, 3-Slot Low Profile Modular Mainframe**
PWRKI A0	North America Power Cord
PWRKI A1	Universal EURO
PWRKI A2	China Power Cord
PWRKI A3	India Power Cord
PWRKI A4	Brazil Power Cord
PWRKI A5	United Kingdom Power Cord
PWRKI A6	Australia Power Cord
PWRKI A10	240 V North America
PWRKI A11	Switzerland Power Cord
PWRKI A12	Japan Power Cord
PWRKI A99	No Power Cord or AC Adapter
PWRKI E1	Bundle; Europe, UK, Liechtenstein, and Switzerland Power Cords
MP5103 R3	Standard warranty extended to 3 years
MP5103 R5	Standard warranty extended to 5 years
MP5103 T3	Three year total protection plan
MP5103 T5	Five year total protection plan
MPSU50-2ST	**MP5000 PSU Module, 50 W, 50 V, 5 A, 2 channels, Standard Power Supply**
MPSU50-2ST ACC3	Accredited calibration service 3 years
MPSU50-2ST ACC5	Accredited calibration service 5 years
MPSU50-2ST C3	Calibration service 3 years
MPSU50-2ST C5	Calibration service 5 years
MPSU50-2ST CD3	Calibration with full data report service 3 years
MPSU50-2ST CD5	Calibration with full data report service 5 years
MPSU50-2ST D1	Calibration data report
MPSU50-2ST ISO	Single ISO 17025A calibration delivered with new product
MPSU50-2ST R3	Standard warranty extended to three 3 years
MPSU50-2ST R5	Standard warranty extended to five 5 years
MPSU50-2ST T3	Three-year total protection plan
MPSU50-2ST T5	Five-year total protection plan
MSMU60-2	**MP5000 SMU Module, 30 W, 60 V, 1.5 A, 2 channels**
MSMU60-2 ACC3	Accredited calibration service 3 years
MSMU60-2 ACC5	Accredited calibration service 5 years
MSMU60-2 C3	Calibration service 3 years
MSMU60-2 C5	Calibration service 5 years
MSMU60-2 CD3	Calibration with full data report service 3 years
MSMU60-2 CD5	Calibration with full data report service 5 years
MSMU60-2 D1	Calibration data report
MSMU60-2 ISO	Single ISO 17025A calibration delivered with new product
MSMU60-2 R3	Standard warranty extended to 3 years
MSMU60-2 R5	Standard warranty extended to 5 years
MSMU60-2 T3	Three-year total protection plan
MSMU60-2 T5	Five-year total protection plan

Accessory List

MP5103

Model Number	Tek Service Part Number	Description (All Supplied)
4299-15	N/A	Fixed 1U Rack Mount Kit
	174745900	Digital IO, 30 position rectangular socket to wire
	CS-1616-3	Safety Interlock Connector
	CA-179-2A	CAT5E, RJ-45 LAN cable, 10 ft
	CA-568-120A	Grounding cable, 120 in
	174751000	USB-C Male to Male, Non-Locking

MSMU60-2

Model Number	Option	Description	Supplied
MSMU-TRX-HI	MSMU-TRX-HI 1M	1 m, Dual Triax to Terminal Header	No
	MSMU-TRX-HI 3M	3 m, Dual Triax to Terminal Header	No
MSMU-TRX-SLO	MSMU-TRX-SLO 1M	1 m, Single Triax SLO/LO to Terminal Header	No
	MSMU-TRX-SLO 3M	3 m, Single Triax SLO/LO to Terminal Header	No
MSMU-TRX-LO	MSMU-TRX-LO 1M	1 m, Single Triax LO to Terminal Header	No
	MSMU-TRX-LO 3M	3 m, Single Triax LO to Terminal Header	No
MSMU-TRX-SLO-CG	MSMU-TRX-SLO-CG 1M	1 m, Single Triax SLO/LO to Terminal Header, LO shorted to ground	No
	MSMU-TRX-SLO-CG 3M	3 m, Single Triax SLO/LO to Terminal Header, LO shorted to ground	No
MSMU-TRX-LO-CG	MSMU-TRX-LO-CG 1M	1 m, Single Triax, LO to Terminal Header, Lo Shorted to Ground	No
	MSMU-TRX-LO-CG 3M	3m, Single Triax, LO to Terminal Header, LO Shorted to Ground	No
Tek Service Part Number	**Description**		**Supplied**
133067400	Screw terminal block 4 position qty 4		Yes

MPSU50-2ST

Tek Service Part Number	Description	Supplied
133038500	8 Position Male Screw Terminal Block	Yes

Contact Information:

Australia 1 800 709 465
Austria* 00800 2255 4835
Balkans, Israel, South Africa and other ISE Countries +41 52 675 3777
Belgium* 00800 2255 4835
Brazil +55 (11) 3530-8901
Canada 1 800 833 9200
Central East Europe / Baltics +41 52 675 3777
Central Europe / Greece +41 52 675 3777
Denmark +45 80 88 1401
Finland +41 52 675 3777
France* 00800 2255 4835
Germany* 00800 2255 4835
Hong Kong 400 820 5835
India 000 800 650 1835
Indonesia 007 803 601 5249
Italy 00800 2255 4835
Japan 81 (3) 6714 3086
Luxembourg +41 52 675 3777
Malaysia 1 800 22 55835
Mexico, Central/South America and Caribbean 52 (55) 88 69 35 25
Middle East, Asia, and North Africa +41 52 675 3777
The Netherlands* 00800 2255 4835
New Zealand 0800 800 238
Norway 800 16098
People's Republic of China 400 820 5835
Philippines 1 800 1601 0077
Poland +41 52 675 3777
Portugal 80 08 12370
Republic of Korea +82 2 565 1455
Russia / CIS +7 (495) 6647564
Singapore 800 6011 473
South Africa +41 52 675 3777
Spain* 00800 2255 4835
Sweden* 00800 2255 4835
Switzerland* 00800 2255 4835
Taiwan 886 (2) 2656 6688
Thailand 1 800 011 931
United Kingdom / Ireland* 00800 2255 4835
USA 1 800 833 9200
Vietnam 12060128

*** European toll-free number. If not accessible, call:** +41 52 675 3777

Rev. 02.2022

Find more valuable resources at TEK.COM

Copyright © Tektronix. All rights reserved. Tektronix products are covered by U.S. and foreign patents, issued and pending. Information in this publication supersedes that in all previously published material. Specification and price change privileges reserved. TEKTRONIX and TEK are registered trademarks of Tektronix, Inc. All other trade names referenced are the service marks, trademarks or registered trademarks of their respective companies.

121225 SBG 1KW-74178-1