JUMO GmbH & Co. KG
Delivery address: Mackenrodtstraße 14,
36039 Fulda, Germany
Postal address: 36035 Fulda, Germany
Phone: +49 661 6003-0
Fax: +49 661 6003-607
e-mail: mail@jumo.net
Internet: www.jumo.net

JUMO Instrument Co. Ltd.
JUMO House
Temple Bank, Riverway
Harlow, Essex CM 20 2TT, UK
Phone: +44 1279 635533
Fax: +44 1279 635262
e-mail: sales@jumo.co.uk
Internet: www.jumo.co.uk

JUMO Process Control, Inc.
8 Technology Boulevard
Canastota, NY 13032, USA
Phone: 315-697-JUMO
1-800-554-JUMO
Fax: 315-697-5867
e-mail: info@jumo.us
Internet: www.jumo.us

Screw-in RTD temperature probe with terminal head form J

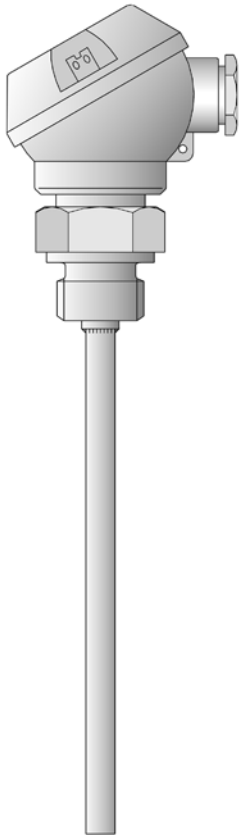

- **For temperatures from -50 to +400°C**
- **As single or double RTD temperature probes**
- **Available with transmitter**
- **Protection class IP65**

Screw-in RTD temperature probes are preferentially used for measuring temperatures in liquids and gases. A decisive selection criterion is the reliable sealing feature of this installation type with vacuum and with overpressure. The application areas are, among others, in the air conditioning technology and refrigeration engineering as well as the HVAC, kiln and apparatus engineering sector.

The measuring insert is normally fitted with a Pt100 temperature sensor according to DIN EN 60751, Class B in 2-wire circuit; versions with Pt500 or Pt1000 temperature sensors can also be supplied, as well as 3- and 4-wire circuit connections. A transmitter can be optionally integrated into the connection head.

Technical Data

Terminal head	Form J, die-cast aluminum, M 16x1.5; IP65, ambient temperature -40 to +100 °C Caution: reduced ambient temperature range when using transmitters, Data Sheet 70.7030
Process connection	thread, stainless steel 1.4571
Protection tube	Stainless steel 1.4571, Ø 6 mm and Ø 8 mm
Measuring insert	Pt100 temperature sensor according to DIN EN 60751, Class B, two-wire circuit
Response times	$t_{0.5}$ = 5 sec, $t_{0.9}$ = 14 sec, in water 0.4 m/sec, 6 mm dia.
Transmitter	Analog transmitter, output 4 to 20 mA, Data sheet 70.7030
Accessories	Sheath, Data Sheet 90.9710 (90.9721)

JUMO GmbH & Co. KG
Delivery address: Mackenrodtstraße 14,
36039 Fulda, Germany
Postal address: 36035 Fulda, Germany
Phone: +49 661 6003-0
Fax: +49 661 6003-607
e-mail: mail@jumo.net
Internet: www.jumo.net

JUMO Instrument Co. Ltd.
JUMO House
Temple Bank, Riverway
Harlow, Essex CM 20 2TT, UK
Phone: +44 1279 635533
Fax: +44 1279 635262
e-mail: sales@jumo.co.uk
Internet: www.jumo.co.uk

JUMO Process Control, Inc.
8 Technology Boulevard
Canastota, NY 13032, USA
Phone: 315-697-JUMO
1-800-554-JUMO
Fax: 315-697-5867
e-mail: info@jumo.us
Internet: www.jumo.us

Dimensions

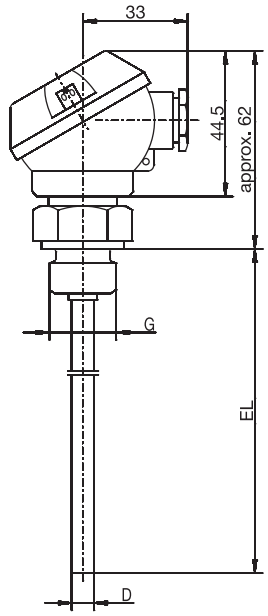

Type 902030/10

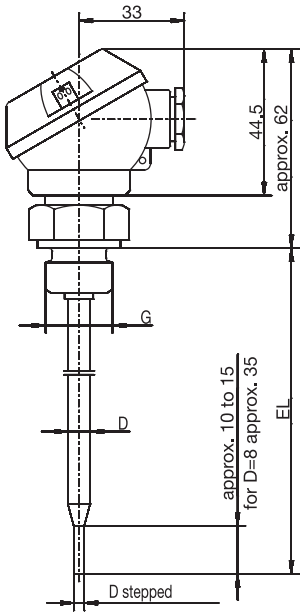

Type 902030/11

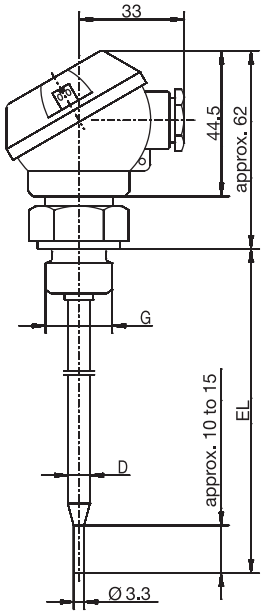

Type 902030/31

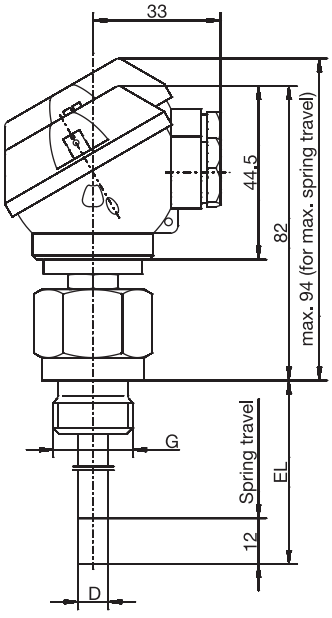

Type 902030/80

JUMO GmbH & Co. KG
Delivery address: Mackenrodtstraße 14,
36039 Fulda, Germany
Postal address: 36035 Fulda, Germany
Phone: +49 661 6003-0
Fax: +49 661 6003-607
e-mail: mail@jumo.net
Internet: www.jumo.net

JUMO Instrument Co. Ltd.
JUMO House
Temple Bank, Riverway
Harlow, Essex CM 20 2TT, UK
Phone: +44 1279 635533
Fax: +44 1279 635262
e-mail: sales@jumo.co.uk
Internet: www.jumo.co.uk

JUMO Process Control, Inc.
8 Technology Boulevard
Canastota, NY 13032, USA
Phone: 315-697-JUMO
1-800-554-JUMO
Fax: 315-697-5867
e-mail: info@jumo.us
Internet: www.jumo.us

Order details: Screw-in RTD temperature probe with terminal head form J

(1) Basic type

				902030/10	Screw-in RTD temperature probes with continuous sheath
				902030/11	Screw-in RTD temperature probes with stepped sheath (with Ø 6 to Ø 3.8 mm; with Ø 8 to Ø 6 mm)
				902030/31	Screw-in RTD temperature probes with stepped sheath for air measurement
				902030/80	Screw-in RTD temperature probes with spring-loaded connection, 12 mm spring deflection, connection head rotatable by 360°

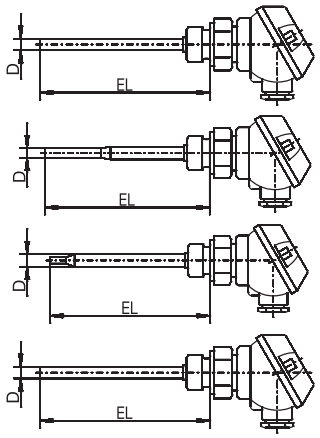

(2) Operating temperature in °C

x	x			647	-20 to +150 °C (only in conjunction with class B and 1x Pt100/1x Pt1000 in 2-wire circuit)
			x	378	-50 to +180 °C
x	x	x		380	-50 to +200 °C
x	x			386	-50 to +260 °C
x	x			402	-50 to +400 °C

(3) Measuring insert

x	x	x	x	1001	1x Pt100 in 3-wire-circuit
x	x	x	x	1003	1x Pt100 in 2-wire circuit
x	x	x	x	1005	1x Pt1000 in 2-wire circuit
x	x	x	x	1011	1x Pt100 in 4-wire circuit
x	x	x	x	2003	2x Pt100 in 2-wire circuit

(4) Tolerance class according to EN 60751

x	x	x	x	1	Class B (standard)
x	x	x	x	2	Class A

(5) Protection tube diameter D in mm

x	x	x		6	Ø 6 mm (standard)
	x		x	8	Ø 8 mm

(6) Fitting length EL in mm (100 ≤ EL ≤ 1000)

x			x	50	50 mm
x	x	x	x	100	100 mm
x	x	x	x	150	150 mm
x	x	x	x	250	250 mm
x	x	x	x	300	300 mm
x	x	x	x	...	Specification in plain text (50 mm steps)

(7) Process connection

x	x	x		102	Screw connection (thread) G 1/4
x	x	x		103	Screw connection (thread) G 3/8
x	x	x	x	104	Screw connection (thread) G 1/2

(8) Extra codes

x	x	x	x	000	without extra codes
x	x	x	x	330	1x analog transmitter, 4 to 20 mA[1] output, Data sheet 70.7030

	(1)		(2)		(3)		(4)		(5)		(6)		(7)		(8)
Order code		-		-		-		-		-		-		/	
Order example	902030/10	-	402	-	1001	-	1	-	6	-	100	-	104	/	000

[1] Specify measuring range in plain text.

JUMO GmbH & Co. KG
Delivery address: Mackenrodtstraße 14,
36039 Fulda, Germany
Postal address: 36035 Fulda, Germany
Phone: +49 661 6003-0
Fax: +49 661 6003-607
e-mail: mail@jumo.net
Internet: www.jumo.net

JUMO Instrument Co. Ltd.
JUMO House
Temple Bank, Riverway
Harlow, Essex CM 20 2TT, UK
Phone: +44 1279 635533
Fax: +44 1279 635262
e-mail: sales@jumo.co.uk
Internet: www.jumo.co.uk

JUMO Process Control, Inc.
8 Technology Boulevard
Canastota, NY 13032, USA
Phone: 315-697-JUMO
1-800-554-JUMO
Fax: 315-697-5867
e-mail: info@jumo.us
Internet: www.jumo.us

Stock versions

(1)		(2)		(3)		(4)		(5)		(6)		(7)		(8)	Part No.
902030/10	-	380	-	2003	-	1	-	6	-	50	-	104	/	000	90/00533450
902030/10	-	380	-	2003	-	1	-	6	-	100	-	104	/	000	90/00533451
902030/10	-	380	-	2003	-	1	-	6	-	150	-	104	/	000	90/00533452
902030/10	-	402	-	1003	-	1	-	6	-	50	-	104	/	000	90/00055692
902030/10	-	402	-	1003	-	1	-	6	-	100	-	104	/	000	90/00055693
902030/10	-	402	-	1003	-	1	-	6	-	150	-	104	/	000	90/00055694
902030/10	-	402	-	1003	-	1	-	6	-	300	-	104	/	000	90/00065691
902030/10	-	402	-	1003	-	1	-	6	-	250	-	104	/	000	90/00533433
902030/10	-	402	-	2003	-	1	-	6	-	50	-	104	/	000	90/00383011
902030/10	-	402	-	2003	-	1	-	6	-	100	-	104	/	000	90/00526429
902030/10	-	402	-	2003	-	1	-	6	-	150	-	104	/	000	90/00533442
902030/10	-	402	-	1003	-	1	-	6	-	50	-	103	/	000	90/00478984
902030/10	-	402	-	1003	-	1	-	6	-	100	-	103	/	000	90/00424045
902030/10	-	380	-	1003	-	1	-	6	-	100	-	104	/	330(-40 to +60 °C)	90/00533453
902030/10	-	647	-	1003	-	1	-	6	-	100	-	104	/	330(0 to 100 °C)	90/00533454
902030/10	-	647	-	1003	-	1	-	6	-	150	-	104	/	330(0 to 100° C)	90/00533468
902030/10	-	402	-	1005	-	1	-	6	-	100	-	104	/	000	90/00359611
902030/10	-	402	-	1005	-	1	-	6	-	150	-	104	/	000	90/00411610
902030/10	-	647	-	1003	-	1	-	6	-	50	-	104	/	000	90/00533448
902030/10	-	647	-	1003	-	1	-	6	-	100	-	104	/	000	90/00533449
902030/10	-	647	-	1003	-	1	-	6	-	150	-	104	/	000	90/00508957
902030/31	-	380	-	1003	-	1	-	6	-	75	-	104	/	000	90/00438406
902030/31	-	380	-	1003	-	1	-	6	-	100	-	104	/	000	90/00438408
902030/31	-	380	-	1003	-	1	-	6	-	150	-	104	/	000	90/00438409