TI01246P/00/EN/06.18
71422363
2018-12-20

Technical Information
Ceraphant PTP33B

Process pressure measurement



Pressure switch for safe measurement and monitoring of absolute and gauge pressure

Application

The Ceraphant is a pressure switch for the measurement of absolute and gauge pressure in gases, vapors, liquids and dust for applications with hygienic requirements. The Ceraphant can be used internationally thanks to a wide range of approvals and process connections.

Your benefits

- High reproducibility and long-term stability
- Reference accuracy: up to 0.3%
- Customized measuring ranges
  - Turn down up to 5:1
  - Sensor for measuring ranges up to 40 bar (600 psi)
- Housing and process isolating diaphragm made of 316L
- Fully-welded process connections
- Suitable for CIP/SIP cleaning
- Optionally available with IO-Link

Operation and electrical connection in accordance with VDMA 24574-1:2008

Endress+Hauser
People for Process Automation

Table of contents

Document information 4
Document function 4
Symbols used 4
Documentation 5
Terms and abbreviations 6
Turn down calculation 7

Function and system design 8
Measuring principle - process pressure measurement 8
Measuring system 8
Device features 8
Product design 10
System integration 10

Input 11
Measured variable 11
Measuring range 11

Output 12
Output signal 12
Range of adjustment 12
Switching capacity 12
Signal range 4 to 20 mA 12
Load (for devices with analog output) 12
Signal on alarm 4 to 20 mA 13
Dead time, time constant 13
Dynamic behavior 13
Dynamic behavior of switch output 14
Damping 14

Power supply 15
Terminal assignment 15
Supply voltage 16
Current consumption and alarm signal 16
Power supply fault 16
Electrical connection 16
Cable specification 17
Residual ripple 17
Influence of power supply 17
Overvoltage protection 17

Performance characteristics of metal process isolating diaphragm 18
Reference operating conditions 18
Measuring uncertainty for small absolute pressure measuring ranges 18
Influence of the installation position 18
Resolution 18
Reference accuracy 18
Thermal change of the zero output and the output span . . . 18
Long-term stability 18
Switch-on time 18

Installation 19
Installation conditions 19
Influence of the installation position 19
Mounting location 19

Environment 22
Ambient temperature range 22
Storage temperature range 22
Climate class 22
Degree of protection 22
Vibration resistance 22
Electromagnetic compatibility 22

Process 23
Process temperature range for devices with metallic process isolating diaphragm 23
Pressure specifications 23

Mechanical construction 24
Design, dimensions 24
Electrical connection 24
Housing 25
Process connections with flush-mounted, metal process isolating diaphragm 26
Materials in contact with process 30
Materials not in contact with process 31
Cleaning 31

Operability 32
IO-Link (optional) 32
Operation with local display 32
Device Search (IO-Link) 33
Functions of switch output 34

Certificates and approvals 36
CE mark 36
RoHS 36
RCM-Tick marking 36
Suitability for hygienic processes 36
Pressure Equipment Directive 2014/68/EU (PED) 36
Manufacturer declarations 37
Other standards and guidelines 37
CRN approval 38
Calibration unit 38
Calibration 38
Inspection certificates 38
Additional approval 39

Ordering information 39
Scope of delivery 39

Accessories 40
Weld-in adapter 40
Process adapter M24 40
M12 plug connectors 41

Documentation 42
Field of Activities 42
Technical Information 42
Operating Instructions 42
Brief Operating Instructions 42

Registered trademarks **42**

Document information

Document function

The document contains all the technical data on the device and provides an overview of the accessories and other products that can be ordered for the device.

Symbols used

Safety symbols

Symbol	Meaning
DANGER	**DANGER!** This symbol alerts you to a dangerous situation. Failure to avoid this situation will result in serious or fatal injury.
WARNING	**WARNING!** This symbol alerts you to a dangerous situation. Failure to avoid this situation can result in serious or fatal injury.
CAUTION	**CAUTION!** This symbol alerts you to a dangerous situation. Failure to avoid this situation can result in minor or medium injury.
NOTICE	**NOTICE!** This symbol contains information on procedures and other facts which do not result in personal injury.

Electrical symbols

Symbol	Meaning	Symbol	Meaning
	**Protective ground connection** A terminal which must be connected to ground prior to establishing any other connections.		**Ground connection** A grounded terminal which, as far as the operator is concerned, is grounded via a grounding system.

Symbols for certain types of information

Symbol	Meaning
	**Permitted** Procedures, processes or actions that are permitted.
	**Forbidden** Procedures, processes or actions that are forbidden.
	**Tip** Indicates additional information.
	Reference to documentation
	Reference to page
	Reference to graphic
	Visual inspection

Symbols in graphics

Symbol	Meaning
1, 2, 3 ...	Item numbers
1. , 2. , 3. ...	Series of steps
A, B, C, ...	Views

Documentation

The document types listed are available:
In the Download Area of the Endress+Hauser Internet site: www.endress.com → Download

Brief Operating Instructions (KA): getting the 1st measured value quickly

Devices with IO-Link: KA01404P

These instructions contain all the essential information from incoming acceptance to initial commissioning (not for devices with IO-Link).

Operating Instructions (BA): your comprehensive reference

These Operating Instructions contain all the information that is required in various phases of the life cycle of the device: from product identification, incoming acceptance and storage, to mounting, connection, operation and commissioning through to troubleshooting, maintenance and disposal.

Terms and abbreviations

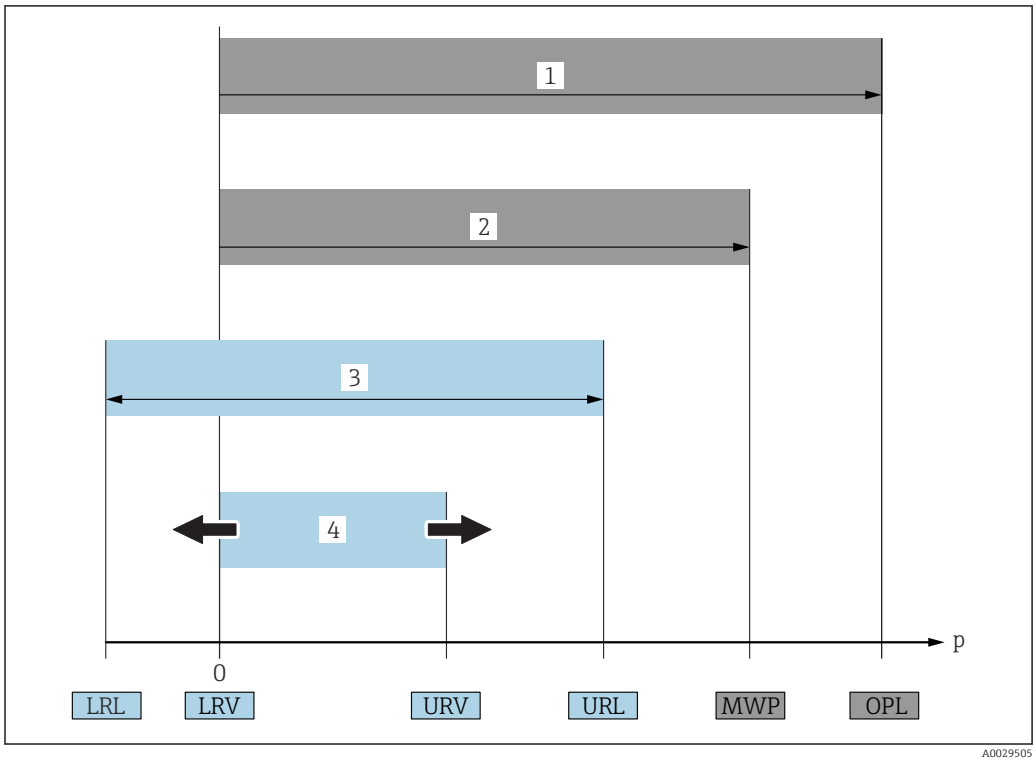

Item	Term/ abbreviation	Explanation
1	OPL	The OPL (over pressure limit = sensor overload limit) for the measuring device depends on the lowest-rated element, with regard to pressure, of the selected components, i.e. the process connection has to be taken into consideration in addition to the measuring cell. Also observe pressure-temperature dependency. For the relevant standards and additional notes, see the "Pressure specifications" section → 23 . The OPL may only be applied for a limited period of time.
2	MWP	The MWP (maximum working pressure) for the sensors depends on the lowest-rated element, with regard to pressure, of the selected components, i.e. the process connection has to be taken into consideration in addition to the measuring cell. Also observe pressure-temperature dependency. For the relevant standards and additional notes, see the "Pressure specifications" section → 23 . The MWP may be applied at the device for an unlimited period. The MWP can also be found on the nameplate.
3	Maximum sensor measuring range	Span between LRL and URL This sensor measuring range is equivalent to the maximum calibratable/adjustable span.
4	Calibrated/adjusted span	Span between LRV and URV Factory setting: 0 to URL Other calibrated spans can be ordered as customized spans.
p	-	Pressure
-	LRL	Lower range limit
-	URL	Upper range limit
-	LRV	Lower range value
-	URV	Upper range value
-	TD (turn down)	Turn down Example - see the following section.

Turn down calculation

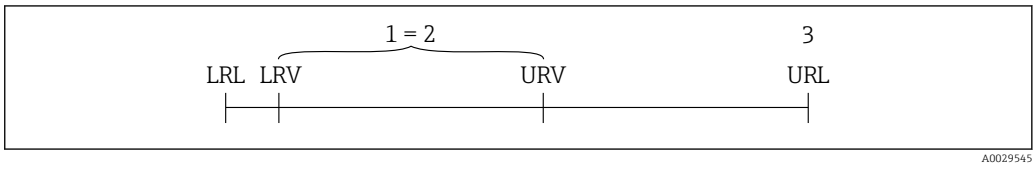

1 Calibrated/adjusted span
2 Zero point-based span
3 URL sensor

Example

- Sensor:10 bar (150 psi)
- Upper range value (URL) = 10 bar (150 psi)
- Calibrated/adjusted span: 0 to 5 bar (0 to 75 psi)
- Lower range value (LRV) = 0 bar (0 psi)
- Upper range value (URV) = 5 bar (75 psi)

Turn down (TD):

$$TD = \frac{URL}{|URV - LRV|}$$

$$TD = \frac{10\ \text{bar (150 psi)}}{|5\ \text{bar (75 psi)} - 0\ \text{bar (0 psi)}|} = 2$$

In this example, the TD is 2:1.
This span is based on the zero point.

Function and system design

Measuring principle - process pressure measurement

Devices with metallic process isolating diaphragm

The process pressure deflects the metal process isolating diaphragm of the sensor and a fill fluid transfers the pressure to a Wheatstone bridge (semiconductor technology). The pressure-dependent change in the bridge output voltage is measured and evaluated.

Advantages:
- Can be used for high process pressures
- Fully welded sensor
- Slim, flush-mounted process connections available

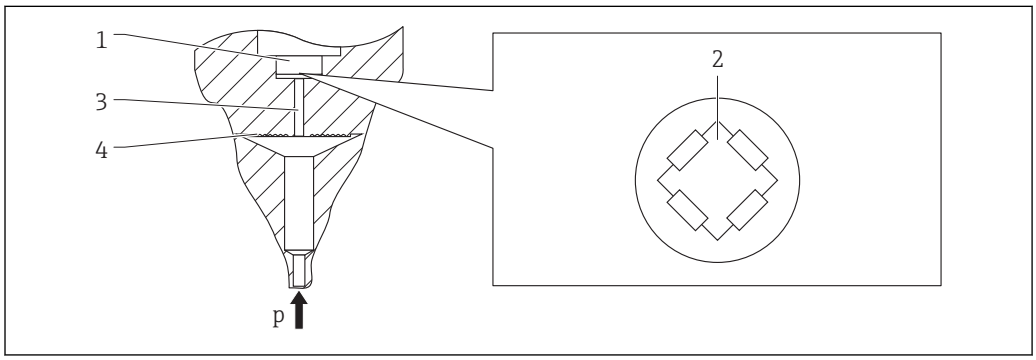

A0016448

1 Silicon measuring element, substrate
2 Wheatstone bridge
3 Channel with fill fluid
4 Metal process isolating diaphragm

Measuring system

A complete measuring system comprises:

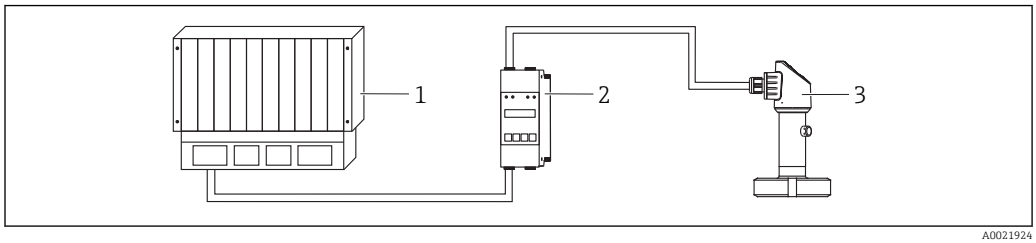

A0021924

1 PLC (programmable logic control)
2 e.g. RMA42 / RIA45 (if required)
3 Device

Device features

Field of application

PTP33B: Gauge and absolute pressure and hygienic applications

Process connections

PTP33B:
- Thread ISO 228
- Thread M24 x 1.5
- SMS
- Varivent
- Clamp/Tri-Clamp
- DIN 11851

Measuring ranges

PTP33B: from 0 to +400 mbar (0 to +6 psi) to 0 to +40 bar (0 to +600 psi).

OPL (depends on the measuring range)

PTP33B: max. 0 to +160 bar (0 to +2 400 psi)

MWP

PTP33B: max. 0 to +100 bar (0 to +1 500 psi)

Process temperature range (temperature at process connection)

PTP33B: −10 to +100 °C (+14 to +212 °F)
(+135 °C (+275 °F) for one hour maximum)

Ambient temperature range

PTP33B: −40 to +70 °C (−40 to +158 °F) (in the range of the temperature limits with restrictions in optical properties, such as display speed and contrast)

Reference accuracy

PTP33B: standard: up to 0.5 %; platinum: up to 0.3 %

Supply voltage

PTP33B: 10 to 30 V DC at a DC power unit

PTP33B IO-Link: 10 to 30 V DC at a DC power unit

IO-Link communication is guaranteed only if the supply voltage is at least 18 V.

Output

Devices with IO-Link:
c/Q output for communication (SIO mode (switch output))

PTP33B:
- 1 x PNP switch output (three-wire) (not with IO-Link)
- 2 x PNP switch output (four-wire), IO-Link
- 1 x PNP switch output + 4 to 20 mA output (four-wire), IO-Link

Material

PTP33B:
- Housing made from 316L (1.4404)
- Process connections made from 316L (1.4435)
- Process isolating diaphragm made from 316L (1.4435)

Options

PTP33B:
- 3.1 Material certificates
- EHEDG/3A approvals
- Certificate of calibration
- Weld-in adapter
- Min. alarm current setting
- IO-Link

Product design

Overview	Item	Description
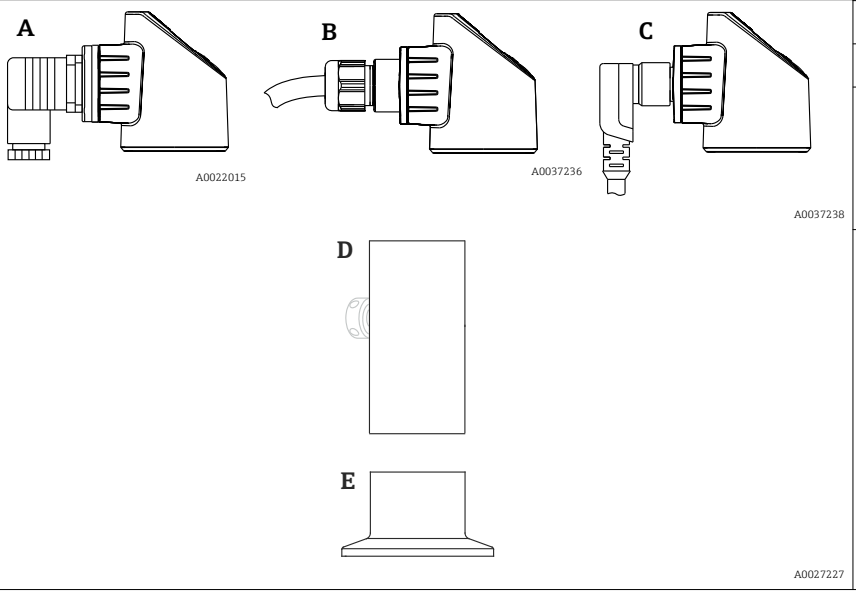	A	Valve plug
	B	Cable
	C	M12 plug Housing cap made of plastic
	D E	Housing Process connection (sample illustration)

System integration

The device can be given a tag name (max. 32 alphanumeric characters).

Designation	Option [1]
Measuring point (TAG), see additional specifications	Z1

1) Product Configurator order code for "Marking"

For devices with IO-Link, an IO-DD is available in the Downloads area of the Endress+Hauser website → 32.

Input

Measured variable

Measured process variable

Gauge pressure or absolute pressure

Calculated process variable

Pressure

Measuring range

Metal process isolating diaphragm

Sensor	Device	Maximum Sensor measuring range		Lowest calibratable span [1]	MWP	OPL	Factory settings [2]	Option [3]
		lower (LRL)	upper (URL)					
		[bar (psi)]	[bar (psi)]	[bar (psi)]	[bar (psi)]	[bar (psi)]		
Devices for gauge pressure measurement								
400 mbar (6 psi) [4]	PTP33B	−0.4 (−6)	+0.4 (+6)	0.4 (6)	1 (15)	1.6 (24)	0 to 400 mbar (0 to 6 psi)	1F
1 bar (15 psi) [4]	PTP33B	−1 (−15)	+1 (+15)	0.4 (6)	2.7 (40.5)	4 (60)	0 to 1 bar (0 to 15 psi)	1H
2 bar (30 psi) [4]	PTP33B	−1 (−15)	+2 (+30)	0.4 (6)	6.7 (100.5)	10 (150)	0 to 2 bar (0 to 30 psi)	1K
4 bar (60 psi) [4]	PTP33B	−1 (−15)	+4 (+60)	0.8 (12)	10.7 (160.5)	16 (240)	0 to 4 bar (0 to 60 psi)	1M
10 bar (150 psi) [4]	PTP33B	−1 (−15)	+10 (+150)	2 (30)	25 (375)	40 (600)	0 to 10 bar (0 to 150 psi)	1P
40 bar (600 psi) [4]	PTP33B	−1 (−15)	+40 (+600)	8 (120)	100 (1500)	160 (2400)	0 to 40 bar (0 to 600 psi)	1S
Devices for absolute pressure measurement								
400 mbar (6 psi) [4]	PTP33B	0 (0)	0.4 (+6)	0.4 (6)	1 (15)	1.6 (24)	0 to 400 mbar (0 to 6 psi)	2F
1 bar (15 psi) [4]	PTP33B	0 (0)	1 (+15)	0.4 (6)	2.7 (40.5)	4 (60)	0 to 1 bar (0 to 15 psi)	2H
2 bar (30 psi) [4]	PTP33B	0 (0)	2 (+30)	0.4 (6)	6.7 (100.5)	10 (150)	0 to 2 bar (0 to 30 psi)	2K
4 bar (60 psi) [4]	PTP33B	0 (0)	4 (+60)	0.8 (12)	10.7 (160.5)	16 (240)	0 to 4 bar (0 to 60 psi)	2M
10 bar (150 psi) [4]	PTP33B	0 (0)	10 (+150)	2 (30)	25 (375)	40 (600)	0 to 10 bar (0 to 150 psi)	2P
40 bar (600 psi) [4]	PTP33B	0 (0)	+40 (+600)	8 (120)	100 (1500)	160 (2400)	0 to 40 bar (0 to 600 psi)	2S

1) Highest turn down that can be set at the factory: 5:1. The turn down is preset and cannot be changed.
2) Other measuring ranges (e.g. −1 to +5 bar (−15 to 75 psi)) can be ordered with customer-specific settings (see the Product Configurator, order code for "Calibration; Unit" option "U"). It is possible to invert the output signal (LRV = 20 mA; URV = 4 mA). Prerequisite: URV < LRV
3) Product Configurator, order code for "Sensor range"
4) Vacuum resistance: 0.01 bar (0.145 psi) abs

Maximum turn down which can be ordered for absolute pressure and gauge pressure sensors

Ranges 0.5%/0.3%: TD 1:1 to TD 5:1

Output

Output signal

Designation	Option [1]
PNP switch output + 4 to 20 mA output (4-wire), IO-Link	7
PNP switch output (3-wire)	4
2 x PNP switch output (4-wire), IO-Link	8

1) Product Configurator, order code for "Output"

Range of adjustment

- Switch output
  Switch point (SP): 0.5 to 100 % in increments of 0.1% (min. 1 mbar * (0.015 psi)) of the upper range limit (URL) switchback point (RSP): 0 to 99.5% in increments of 0.1% (min. 1 mbar * (0.015 psi)) of the upper range limit (URL)
  Minimum distance between SP and RSP: 0.5 % URL
- Analog output (if available)
  Lower range value (LRV) and upper range value (URV) can be set anywhere within the sensor range (LRL - URL). Turn down for analog output up to 5:1 of upper sensor limit (URL).
- Factory setting (if no customer-specific setting is ordered):
  Switch point SP1: 90 %; switchback point RP1: 10 %;
  Switch point SP2: 95 %; switchback point RP2: 15 %;
  Analog output: LRV 0 %; URV 100 %

* For measuring ranges with a negative gauge pressure up to 4 bar (60 psi), the increment when setting the switch point is min. 10 mbar (0.15 psi)

Switching capacity

- Switch state ON: $I_a \leq 250$ mA; switch state OFF: $I_a \leq 1$ mA
- Devices with IO-Link: Switch state ON [1]: $I_a \leq 200$ mA [2]; switch state OFF: $I_a \leq 100$ µA
- Switch cycles: >10,000,000
- Voltage drop PNP: ≤2 V
- Overload protection: Automatic load testing of switching current;
  - Max. capacitive load: 14 µF at max. supply voltage (without resistive load)
  - Devices with IO-Link: Max. capacitive load: 1 µF at max. supply voltage (without resistive load)
  - Max. cycle duration: 0.5 s; min. t_{on}: 4 ms
  - Max. cycle duration: 0.5 s; min. t_{on}: 40 µs
  - Periodic disconnection from protective circuit in the event of overcurrent (f = 2 Hz) and "F804" displayed

Signal range 4 to 20 mA

3.8 mA to 20.5 mA

Load (for devices with analog output)

In order to guarantee sufficient terminal voltage, a maximum load resistance R_L (including line resistance) must not be exceeded depending on the supply voltage U_B of the supply unit.

The maximum load resistance depends on the terminal voltage and is calculated according to the following formula:

1) 100 mA can be guaranteed over the entire temperature range for the switch outputs "2 x PNP" and "1 x PNP + 4 to 20 mA output". For lower ambient temperatures, higher currents are possible but cannot be guaranteed. Typical value at 20 °C (68 °F) approx. 200 mA. 200 mA can be guaranteed over the entire temperature range for the "1 x PNP" current output.
2) Larger currents are supported, thus deviating from the IO-Link standard.

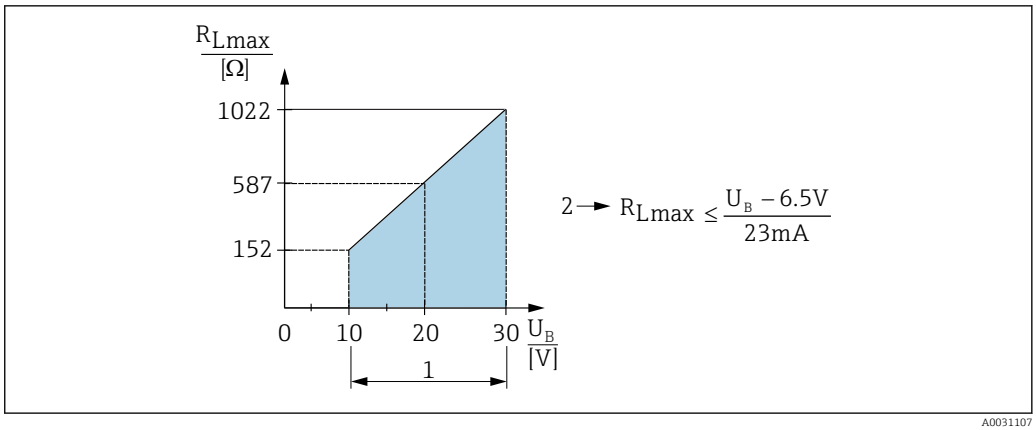

1 Power supply 10 to 30 V DC
2 R_{Lmax} maximum load resistance
U_B Supply voltage

If load is too great:
- failure current is output and "S803" displayed (output: MIN alarm current)
- Periodic checking to establish if it is possible to quit fault state
- In order to guarantee sufficient terminal voltage, a maximum load resistance RL (including line resistance) must not be exceeded depending on the supply voltage UB of the supply unit.

Signal on alarm 4 to 20 mA

The response of the output to error is regulated in accordance with NAMUR NE43.

The behavior of the current output in the event of faults is defined in the following parameters:
- Alarm current FCU "MIN": Lower alarm current (≤3.6 mA) (optional, see the following table)
- Alarm current FCU "MAX" (factory setting): Upper alarm current (≥21 mA)
- Alarm current FCU "HLD" (HOLD) (optional, see the following table): Last measured current value is held. When the device starts, the current output is set to "Lower alarm current" (≤3.6 mA).

alarm current

Device	Description	Option
PTP33B	Adjusted min. alarm current	IA [1]
PTP33B	1 low ≤3.6 mA 2 high ≥21 mA 3 last current value	U [2]

1) Product Configurator order code for "Service"
2) Product Configurator order code for "Calibration/unit"

Dead time, time constant

Presentation of the dead time and the time constant:

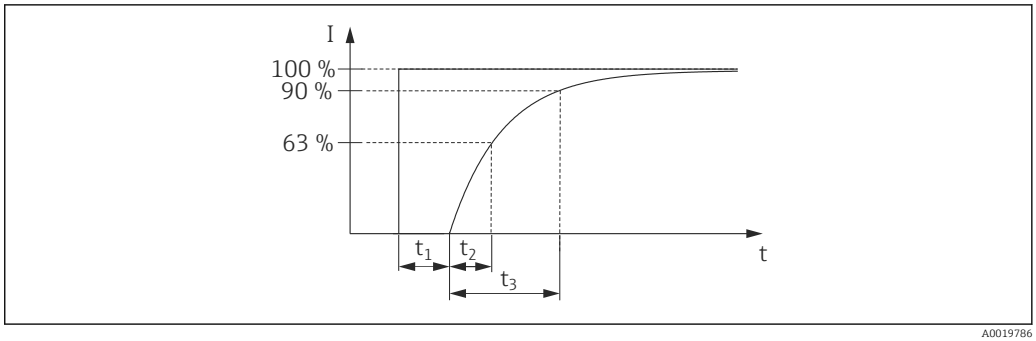

Dynamic behavior

Analog electronics

Dead time (t_1) [ms]	Time constant (T63), t_2 [ms]	Time constant (T90), t_3 [ms]
7 ms	11 ms	16 ms

Dynamic behavior of switch output

PNP switch output and 2 x PNP switch output: response time ≤20 ms

Damping

Once the supply voltage has been applied, damping for the first measured value is at 0 i.e. the first measured value applied always corresponds to the actual measured value (regardless of damping).

A damping affects all outputs (output signal, display):
- Via local display, infinitely variable 0 to 999.9 s
- Factory setting: 2.0 s

Power supply

⚠ WARNING

Electrical safety is compromised by an incorrect connection!

- In accordance with IEC/EN61010 a separate circuit breaker must be provided for the device .
- Protective circuits against reverse polarity, HF influences and overvoltage peaks are integrated.
- The device must be operated with a 630 mA fine-wire fuse (slow-blow).

Terminal assignment

1 x PNP switch output R1 (not with IO-Link functionality)

M12 plug	Valve plug	Cable
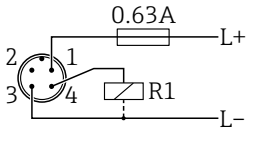	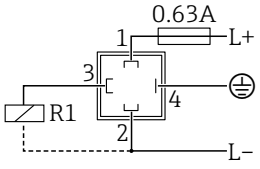	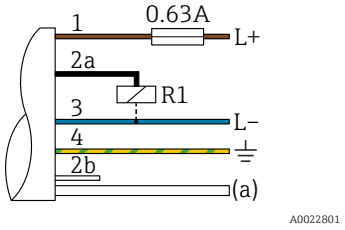 *1 brown = L+* *2a black = switch output 1* *2b white = not in use* *3 blue = L-* *4 green/yellow = ground* *(a) reference air hose*

2 x PNP switch output R1 and R2

M12 plug	Valve plug	Cable
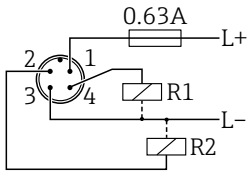	-	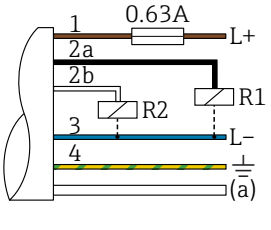 *1 brown = L+* *2a black = switch output 1* *2b white = switch output 2* *3 blue = L-* *4 green/yellow = ground* *(a) reference air hose*

IO-Link: 2 x PNP switch output R1 and R2

M12 plug
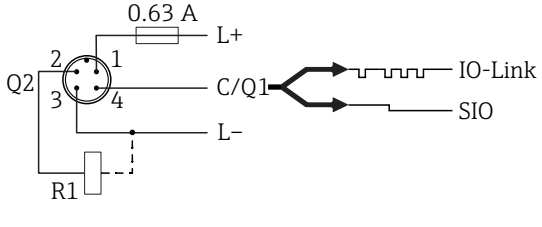

1 x PNP switch output R1 with additional analog output 4 to 20 mA (active)

M12 plug	Valve plug	Cable
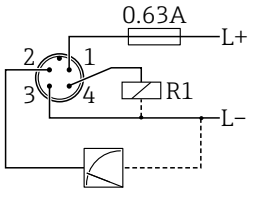	-	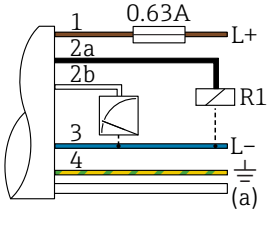 *1 brown = L+* *2a black = switch output 1* *2b white = analog output 4 to 20 mA* *3 blue = L-* *4 green/yellow = ground* *(a) reference air hose*

IO-Link: 1 x PNP switch output R1 with additional analog output 4 to 20 mA (active)

M12 plug
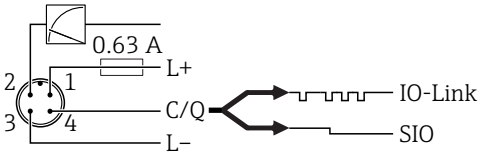

Supply voltage

Supply voltage: 10 to 30 V DC at a DC power unit

Supply voltage IO-Link: 10 to 30 V DC at a DC power unit

IO-Link communication is guaranteed only if the supply voltage is at least 18 V.

Current consumption and alarm signal

Intrinsic power consumption	Alarm current (for devices with analog output) [1]
≤ 60 mA	≥21 mA (factory setting)
Devices with IO-Link: Maximum current consumption: ≤ 300 mA	

1) Setting min. alarm current ≤3.6mA can be ordered via the product order structure. Min. alarm current ≤3.6mA can be configured at the device or via IO-Link.

Power supply fault

- Behavior in the event of overvoltage (>30 V):
  The device works continuously up to 34 V DC without damage. If the supply voltage is exceeded, the specified characteristics are no longer guaranteed.
- Behavior in the event of undervoltage:
  If the supply voltage falls below the minimum value, the device switches off in a defined manner.

Electrical connection

Degree of protection

Device	Connection	Degree of protection	Option [1]
PTP33B	Cable5 m (16 ft)	IP66/67 NEMA type 4X enclosure	D
PTP33B	Cable10 m (33 ft)	IP66/67 NEMA type 4X enclosure	E
PTP33B	Cable25 m (82 ft)	IP66/67 NEMA type 4X enclosure	F
PTP33B	M12 plug	IP65/67 NEMA type 4X enclosure	M
PTP33B	Valve plug ISO4400 M16	IP65 NEMA type 4X enclosure	U
PTP33B	Valve plug ISO4400 NPT ½	IP65 NEMA type 4X enclosure	V

1) Product Configurator order code for "Electrical connection"

Cable specification	For valve plug: < 1.5 mm^2 (16 AWG) and Ø4.5 to 10 mm (0.18 to 0.39 in)
Residual ripple	The device operates within the reference accuracy up to ±5 % of the residual ripple of the supply voltage, within the permitted voltage range.
Influence of power supply	≤0.005 % of the URL/1 V
Overvoltage protection	The device does not contain any special elements to protect against overvoltage ("wire to ground"). Nevertheless the requirements of the applicable EMC standard EN 61000-4-5 (testing voltage 1kV EMC wire/ground) are met.

Performance characteristics of metal process isolating diaphragm

Reference operating conditions

- As per IEC 60770
- Ambient temperature T_A = constant, in the range: +21 to +33 °C (+70 to +91 °F)
- Humidity φ = constant, in the range: 5 to 80 % rH
- Ambient pressure p_A = constant, in the range: 860 to 1060 mbar (12.47 to 15.37 psi)
- Position of measuring cell = constant, in the range: horizontal ±1° (see also "Influence of the installation position" section → 19)
- Zero based span
- Process isolating diaphragm material: AISI 316L (1.4435)
- Filling oil: synthetic oil polyalphaolefin FDA 21 CFR 178.3620, NSF H1
- Supply voltage: 24 V DC ±3 V DC
- Load: 320 Ω (at 4 to 20 mA output)

Measuring uncertainty for small absolute pressure measuring ranges

The smallest extended uncertainty of measurement that can delivered by our standards is:

- in the range 1 to 30 mbar (0.0145 to 0.435 psi): 0.4 % of reading
- in the range < 1 mbar (0.0145 psi): 1 % of reading.

Influence of the installation position

→ 19

Resolution

Current output: min. 1.6 µA

Display: can be set (factory setting: presentation of the maximum accuracy of the transmitter)

Reference accuracy

The reference accuracy contains the non-linearity [DIN EN 61298-2 3.11] including the pressure hysteresis [DIN EN 61298-23.13] and non-repeatability [DIN EN 61298-2 3.11] in accordance with the limit point method as per [DIN EN 60770].

Device	% of the calibrated span to the maximum turn down		
	Reference accuracy	Non-linearity	Non-repeatability
PTP33B - standard	±0.5	±0.1	±0.1
PTP33B - platinum	±0.3	±0.1	±0.1

Overview of the turn down ranges → 11

Thermal change of the zero output and the output span

Measuring cell	−20 to +85 °C (−4 to +185 °F)	−40 to −20 °C (−40 to −4 °F) +85 to +100 °C (+185 to +212 °F)
	% of the calibrated span for TD 1:1	
<1 bar (15 psi)	<1	<1.2
≥ 1 bar (15 psi)	<0.8	<1

Long-term stability

Device	1 year	5 years	8 years
	% of URL		
PTP33B	±0.2	±0.4	In preparation

Switch-on time

≤2 s

The following applies for IO-Link: For small measuring ranges, pay attention to the thermal compensation effects.

Installation

Installation conditions

- Moisture must not penetrate the housing when mounting the device, establishing the electrical connection and during operation.
- Point the cable and connector downwards where possible to prevent moisture from entering (e.g. rain or condensation water).

Influence of the installation position

Any orientation is possible. However, the orientation may cause a zero point shift i.e. the measured value does not show zero when the vessel is empty or partially full.

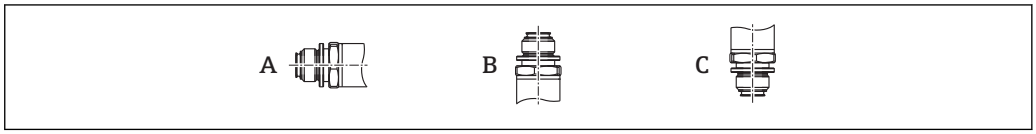

A0024708

Type	Process isolating diaphragm axis is horizontal (A)	Process isolating diaphragm pointing upwards (B)	Process isolating diaphragm pointing downwards (C)
PTP33B	Calibration position, no effect	Up to +4 mbar (+0.058 psi)	Up to −4 mbar (−0.058 psi)

A position-dependent zero shift can be corrected on the device .

Mounting location

Pressure measurement

Pressure measurement in gases

Mount the device with shutoff device above the tapping point so that any condensate can flow into the process.

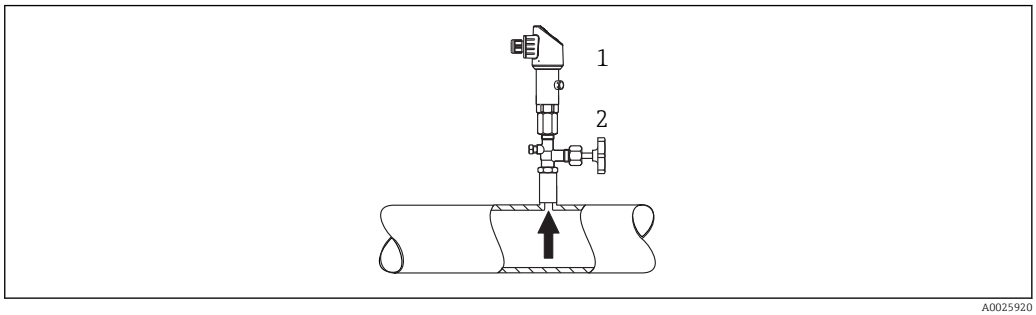

A0025920

1 Device
2 Shutoff device

Pressure measurement in vapors

Advantage:
- defined water column causes only minor/negligible measuring errors and
- only minor/negligible heat effects on the device.

Mounting above the tapping point is also permitted.

Note the max. permitted ambient temperature of the transmitter!

Take the influence of the hydrostatic water column into consideration.

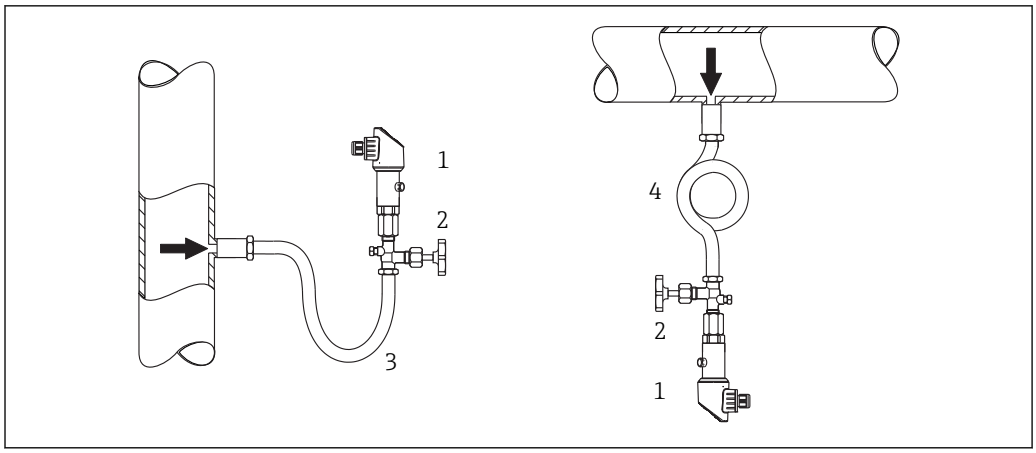

A0025921

1 Device
2 Shutoff device
3 Siphon
4 Siphon

Pressure measurement in liquids

Mount the device with a shutoff device and siphon below or at the same height as the tapping point.

Take the influence of the hydrostatic water column into consideration.

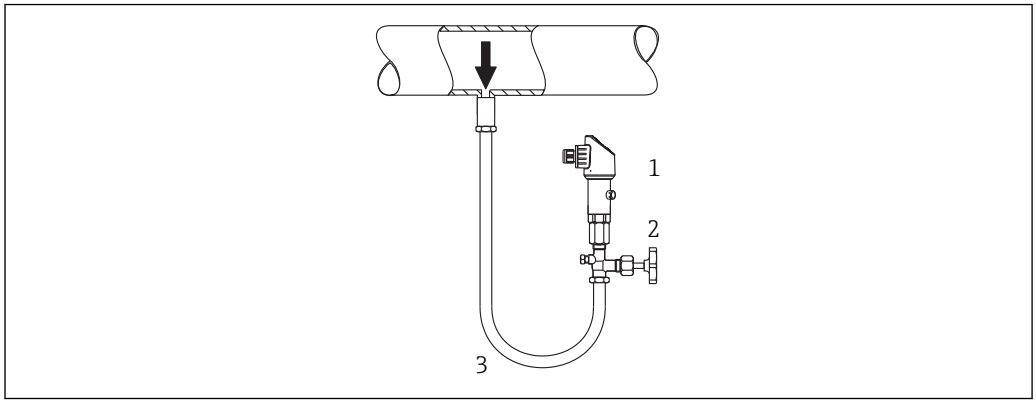

A0025922

1 Device
2 Shutoff device
3 Siphon

Level measurement

- Always install the device below the lowest measuring point.
- Do not install the device at the following positions:
  - In the filling curtain
  - In the tank outlet
  - in the suction area of a pump
  - Or at a point in the tank which could be affected by pressure pulses from the agitator.
- A functional test can be carried out more easily if you mount the device downstream from a shutoff device.

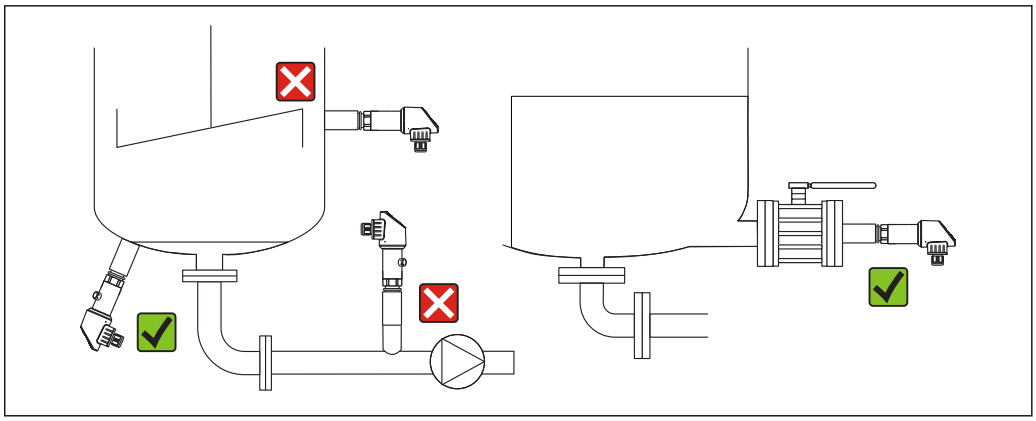

A0025923

Environment

Ambient temperature range

Device	Ambient temperature range [1]
PTP33B	−20 to +70 °C (−4 to +158 °F) IO-Link: −40 to +70 °C (−40 to +158 °F) (in the range of the temperature limits with restrictions in optical properties, such as display speed and contrast)

1) Exception: the following cable is designed for an ambient temperature range of −25 to +70 °C (−13 to +158 °F): Product Configurator order code for "Enclosed accessories" option "RZ".

Storage temperature range

−40 to +85 °C (−40 to +185 °F)

Climate class

Device	Climate class	Note
PTP33B	Class 3K5	Air temperature: −5 to +45 °C (+23 to +113 °F), relative humidity: 4 to 95 % satisfied according to IEC 721-3-3 (condensation not possible)

Degree of protection

Device	Connection	Degree of protection	Option [1]
PTP33B	Cable5 m (16 ft)	IP66/67 NEMA type 4X enclosure	D
PTP33B	Cable10 m (33 ft)	IP66/67 NEMA type 4X enclosure	E
PTP33B	Cable25 m (82 ft)	IP66/67 NEMA type 4X enclosure	F
PTP33B	M12 plug	IP65/67 NEMA type 4X enclosure	M
PTP33B	Valve plug ISO4400 M16	IP65 NEMA type 4X enclosure	U
PTP33B	Valve plug ISO4400 NPT ½	IP65 NEMA type 4X enclosure	V

1) Product Configurator order code for "Electrical connection"

Vibration resistance

Test standard	Vibration resistance
IEC 60068-2-64:2008	Guaranteed for 5 to 2000Hz: 0.05 g^2/Hz

Electromagnetic compatibility

- Interference emission as per EN 61326-1 equipment B
- Interference immunity as per EN 61326-1 (industrial environment)
- Devices with IO-Link: For intended use, the switch output can switch to the communication mode for 0.2 s in the event of transient faults.
- NAMUR recommendation EMC (NE21) (not for devices with IO-Link)
- Maximum deviation: 1.5% with TD 1:1

For more details, please refer to the Declaration of Conformity.

Process

Process temperature range for devices with metallic process isolating diaphragm

Device	Process temperature range
PTP33B	−10 to +100 °C (+14 to +212 °F)
PTP33B Sterilization in place (SIP)	At +135°C (+275 °F) for a maximum of one hour (device in operation but not within measuring specification)

Applications with changes in temperature

Frequent extreme changes in temperatures can temporarily cause measuring errors. Internal temperature compensation is faster the smaller the change in temperature and the longer the time interval.

For further information please contact your local Endress+Hauser Sales Center.

Pressure specifications

⚠ WARNING

The maximum pressure for the measuring device depends on the lowest-rated element with regard to pressure.

- For pressure specifications, see the "Measuring range" section and the "Mechanical construction" section.
- The Pressure Equipment Directive (2014/68/EU) uses the abbreviation "PS". The abbreviation "PS" corresponds to the MWP (maximum working pressure) of the measuring device.
- MWP (maximum working pressure): The MWP (maximum working pressure) is specified on the nameplate. This value is based on a reference temperature of +20 °C (+68 °F) and may be applied to the device for an unlimited period of time. Observe the temperature dependency of the MWP.
- OPL (over pressure limit): The test pressure corresponds to the over pressure limit of the sensor and may only be applied temporarily to ensure that the measurement is within the specifications and no permanent damage develops. In the case of sensor range and process connections where the over pressure limit (OPL) of the process connection is smaller than the nominal value of the sensor, the device is set at the factory, at the very maximum, to the OPL value of the process connection. If you want to use the entire sensor range, select a process connection with a higher OPL value.

Mechanical construction

For the dimensions, see the Product Configurator: www.endress.com

Search for product → click "Configuration" to the right of the product image → after configuration click "CAD"

The following dimensions are rounded values. For this reason, they may deviate slightly from the dimensions given on www.endress.com.

Design, dimensions

Device height

The device height is calculated from

- the height of the electrical connection
- the height of the housing and
- the height of the individual process connection.

The individual heights of the components are listed in the following sections. To calculate the device height simply add up the individual heights of the components. Where applicable also take into consideration the installation distance (space that is used to install the device). You can use the following table for this purpose:

Section	Page	Height	Example
Electrical connection	→ 24	(A)	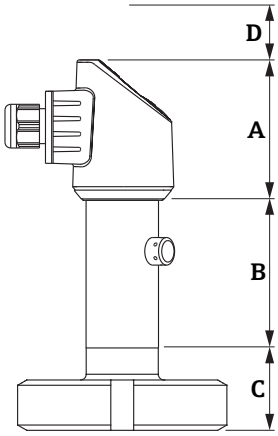
Housing height	→ 25	(B)	
Process connection height	→ 26	(C)	
Installation distance	-	(D)	

Electrical connection

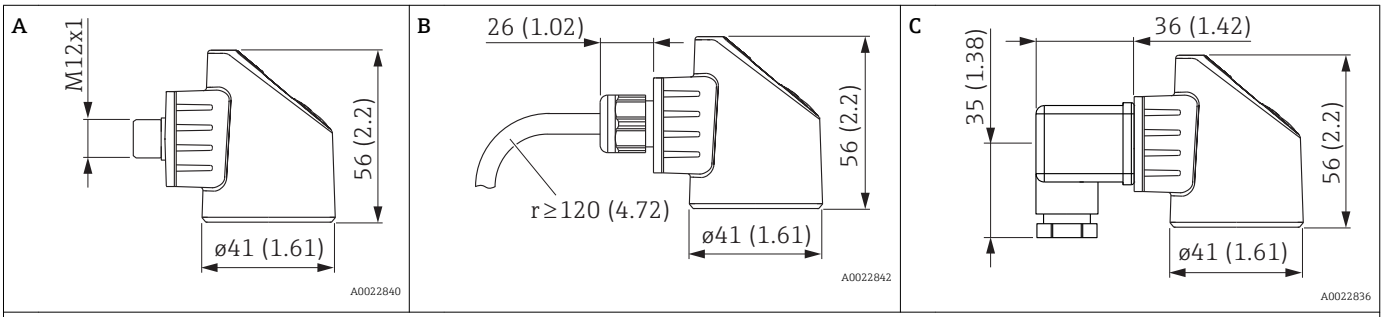

Engineering unit mm (in)

Position	Designation	Material	Weight kg (lbs)	Option [1]
A	M12 plug IP65/67 (Additional dimensions → 41)	Housing cap made of plastic	0.012 (0.03)	M Plug connector with cable can be ordered as an accessory → 41
B	Cable5 m (16 ft)	PUR (UL94V0)	0.280 (0.62)	D
B	Cable10 m (33 ft)	PUR (UL94V0)	0.570 (1.26)	E
B	Cable25 m (82 ft)	PUR (UL94V0)	1.400 (3.09)	F

Position	Designation	Material	Weight kg (lbs)	Option [1]
C	M16 valve plug	Plastic PPSU	0.060 (0.14)	U
C	NPT ½ valve plug	Plastic PPSU	0.060 (0.14)	V

1) Product Configurator, order code for "Electrical connection"

Housing

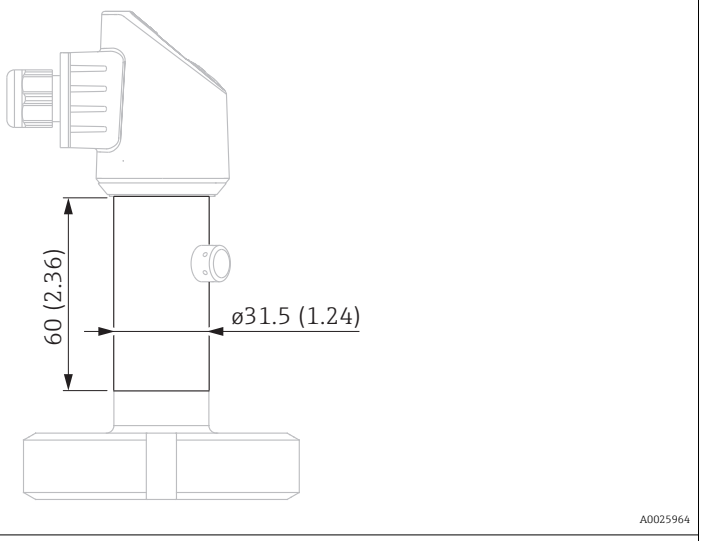

Engineering unit mm (in)

Device	Material	Weight kg (lbs)
PTP33B	Stainless steel 316L	0.100 (0.22)

Process connections with flush-mounted, metal process isolating diaphragm **Thread ISO 228 G**

A

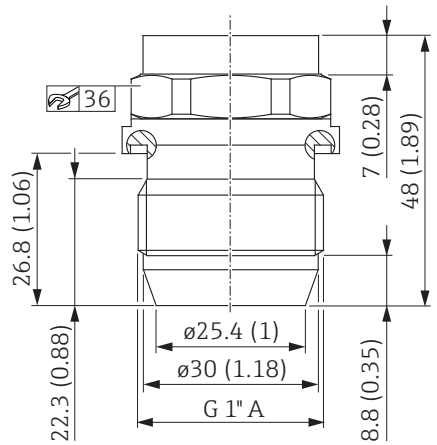

B

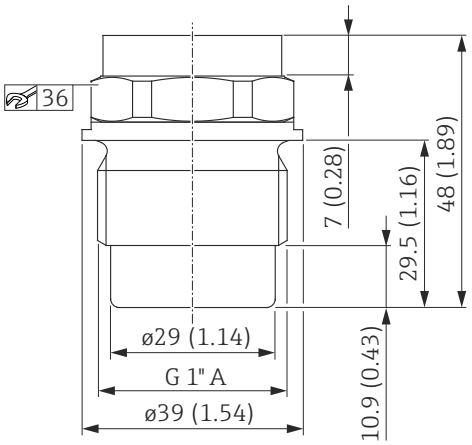

Engineering unit mm (in). Diameter of process isolating diaphragm: 17.2 mm (0.68 in)

Item	Description	Seal	Material	Weight	Approval	Option [1]
				kg (lbs)		
A	Thread ISO 228 G 1" A	Metal joint	316L	0.270 (0.60)	CRN	WQJ
B	Thread ISO 228 G 1" A	Seal established via O-ring. VMQ O-ring is enclosed with QJ and QK accessories.	316L	0.270 (0.60)	EHEDG, 3A [2], CRN	WSJ

1) Product Configurator, order code for "Process connection"
2) EHEDG and 3A only in conjunction with weld-in adapter → 🖹 40

Thread M24 x 1.5

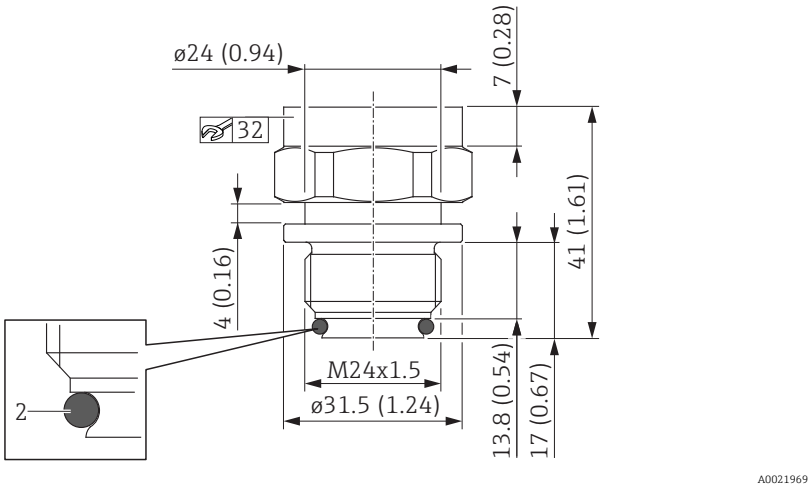

Engineering unit mm (in). Diameter of process isolating diaphragm: 17.2 mm (0.68 in)

Designation	Seal	Material	Weight	Approval	Option [1]
			kg (lbs)		
M24 x 1.5 [2]	EPDM O-ring (2), pre-mounted	316L	0.150 (0.33)	EHEDG, 3A, CRN	X2J
M24 x 1.5 [2]	FKM O-ring (2), pre-mounted	316L	0.150 (0.33)	EHEDG, 3A, CRN	X3J

1) Product Configurator, order code for "Process connection"
2) torque 65 Nm (48 lbf ft)

Hygienic connections

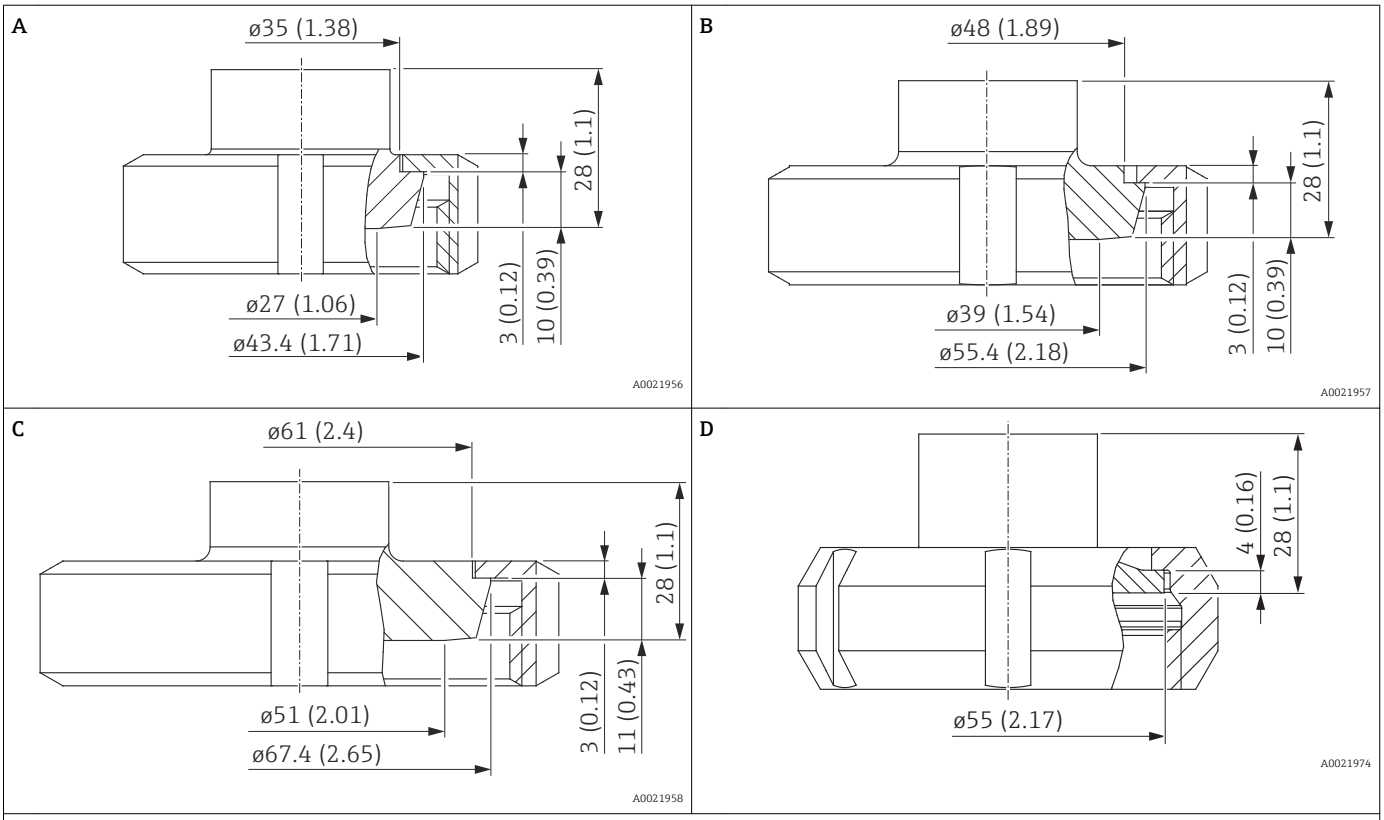

Engineering unit mm (in). Diameter of process isolating diaphragm: 17.2 mm (0.68 in)

Position	Designation	Nominal pressure	Material [1]	Weight	Approval	Option [2]
		PN		kg (lbs)		
A	DIN 11851 DN 25	40	316L	0.360 (0.79)	3A, EHEDG, CRN	1GJ
B	DIN 11851 DN 40	40	316L	0.520 (1.15)	3A, EHEDG, CRN	1JJ
C	DIN 11851 DN 50	25	316L	0.760 (1.68)	3A, EHEDG, CRN	1DJ
D	SMS 1 ½"	25	316L	0.440 (0.97)	3A, CRN	4QJ

1) Roughness of wetted surfaces Ra ≤0.76 µm (29.9 µin).
2) Product Configurator, order code for "Process connection"

Hygienic connections

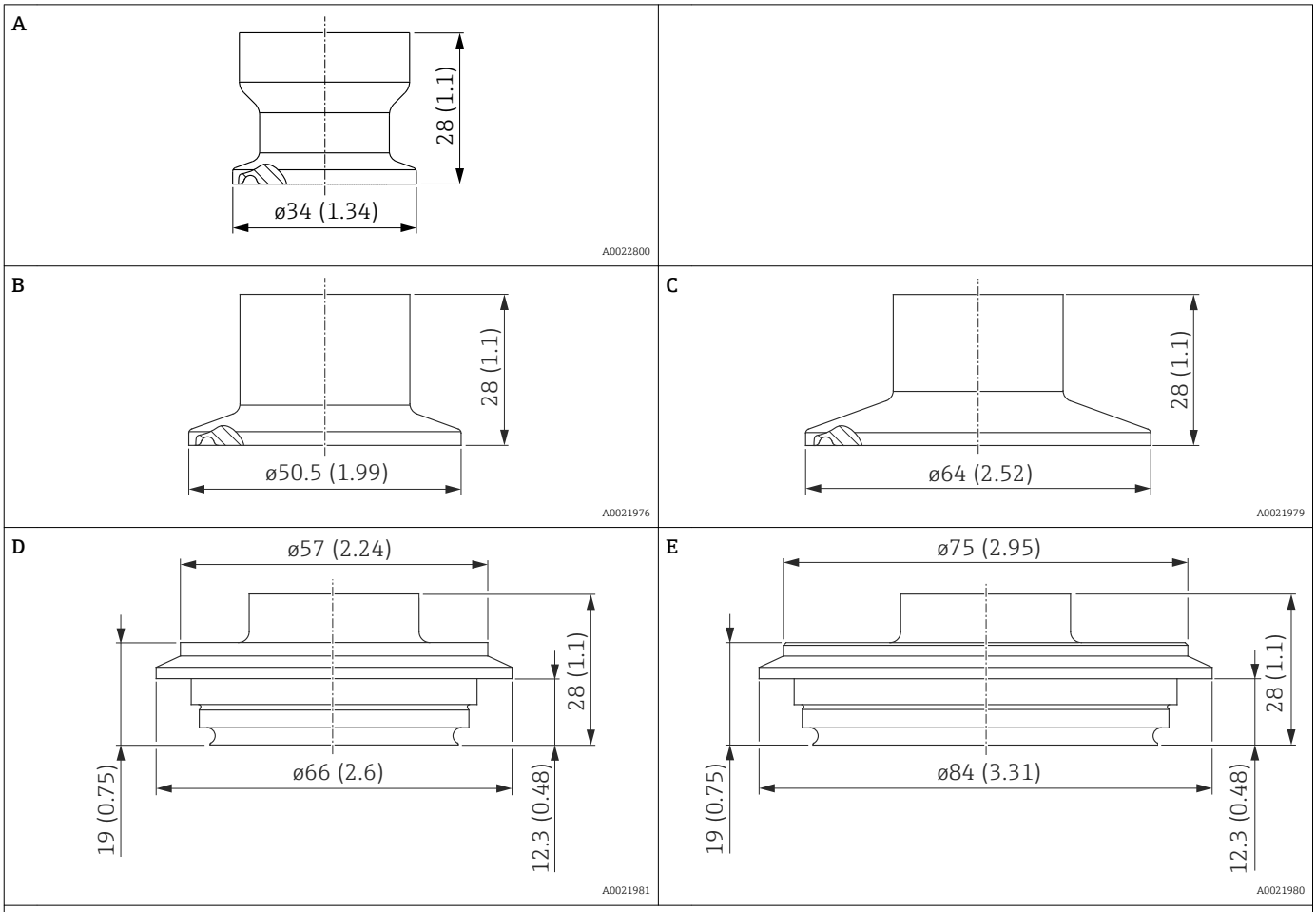

Engineering unit mm (in). Diameter of process isolating diaphragm: 17.2 mm (0.68 in)

Item	Description	Approval	Nominal pressure	Material [1]	Weight	Option [2]
			PN		kg (lbs)	
A	Clamp ISO 2852 DN22	3A, EHEDG, CRN	40	316L	0.090 (0.20)	3AJ
B	Tri-Clamp ISO 2852 DN 25 – DN 38 (1 ½"), DIN32676 DN25-38	3A, EHEDG, CRN	40	316L	0.160 (0.35)	3CJ
C	Tri-Clamp ISO 2852 DN 40 – DN 51 (2"), DIN32676 DN50, EHEDG, 3A	3A, EHEDG, CRN	40	316L	0.230 (0.51)	3EJ
D	Varivent F pipe DN25-32	3A, EHEDG, CRN	40	316L	0.350 (0.77)	41J
E	Varivent N pipe DN40-162	3A, EHEDG, CRN	40	316L	0.630 (1.39)	42J

1) Roughness of wetted surfaces Ra ≤0.76 µm (29.9 µin).
2) Product Configurator, order code for "Process connection"

Materials in contact with process

NOTICE

- ▶ Device components in contact with the process are listed in the "Mechanical construction" and "Ordering information" sections.

TSE Certificate of Suitability

The following applies to all device components in contact with the process:

- They do not contain any materials derived from animals.
- No additives or operating materials derived from animals are used in production or processing.

Process connections

- Endress+Hauser supplies a threaded connection made of stainless steel in accordance with AISI 316L (DIN/ EN material number 1.4404 or 1.4435). With regard to their stability-temperature property, the materials 1.4404 and 1.4435 are grouped together under 13E0 in EN 1092-1: 2001 Tab. 18. The chemical composition of the two materials can be identical.
- "Clamp connections" and "Hygienic process connections": AISI 316L (DIN/EN material number 1.4435)

Process isolating diaphragm

Description	Material
Metal process isolating diaphragm	AISI 316L (DIN/EN material number 1.4435)

Seals

See the specific process connection.

Materials not in contact with process

Housing

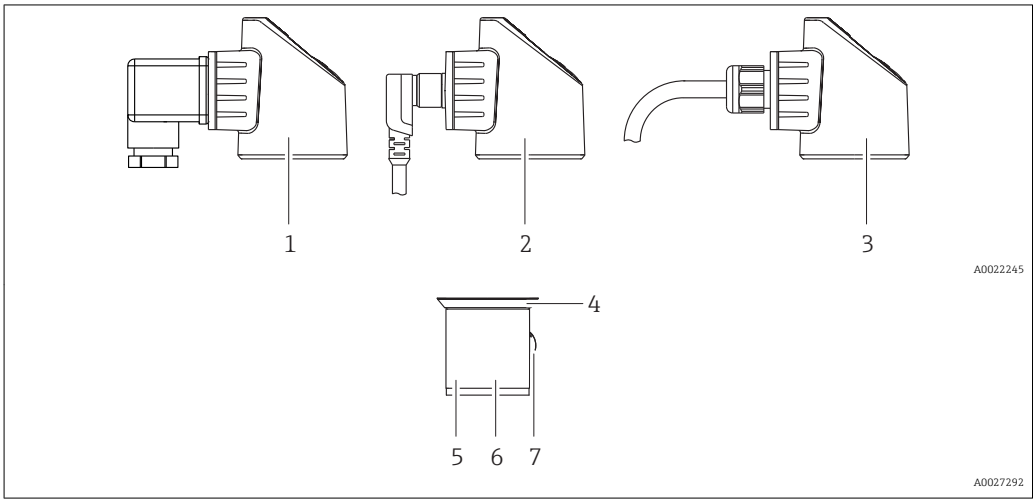

Item number	Component part	Material
1	Housing with valve plug connection	▪ Seal: NBR ▪ Plug: PA ▪ Screw: V2A ▪ Adapter plate: PBT/PC ▪ Housing: PBT/PC
2	Housing prepared for M12 plug connection	▪ Adapter plate: PBT/PC ▪ For other materials, see the "Accessories" section ▪ Housing: PBT/PC
3	Housing with cable connection	▪ Pressure screw: PVDF ▪ Seal: TPE-V ▪ Cable: PUR (UL 94 V0) ▪ Adapter plate: PBT/PC ▪ Housing: PBT/PC
4	Design element	PBT/PC
5	Nameplates	Lasered directly onto the housing
6	Housing	316L (1.4404)
7	Pressure compensation element	316L (1.4404)

Filling oil

Device	Filling oil
PTP33B	Synthetic oil polyalphaolefin FDA 21 CFR 178.3620, NSF H1

Cleaning

Device	Description	Option [1]
PTP33B	Cleaned from oil+grease	HA

1) Product Configurator, order code for "Service"

Operability

IO-Link (optional)

Operating concept for devices with IO-Link

Operator-oriented menu structure for user-specific tasks

Quick and safe commissioning

Guided menus for applications

Reliable operation

Operation in the following languages:
Via IO-Link: English

Efficient diagnostics increase measurement availability

- Remedial measures
- Simulation options

IO-Link information

IO-Link is a point-to-point connection for communication between the measuring device and an IO-Link master. The measuring device features an IO-Link communication interface type 2 with a second IO function on pin 4. This requires an IO-Link-compatible assembly (IO-Link master) for operation. The IO-Link communication interface enables direct access to the process and diagnostic data. It also provides the option of configuring the measuring device on the fly.

Physical layer, the measuring device supports the following features:
- IO-Link specification: version 1.1
- IO-Link Smart Sensor Profile 2nd Edition (supports minimum scope of IdentClass)
- SIO mode: yes
- Speed: COM2; 38.4 kBaud
- Minimum cycle time: 2.5 msec.
- Process data width: 32 bit
- IO-Link data storage: yes
- Block parameterization: yes

IO-Link download

http://www.endress.com/download
- Select "Software" as the media type.
- Select "Device Driver" as the software type.
  Select IO-Link (IODD).
- In the "Text Search" field enter the device name.

https://ioddfinder.io-link.com/
Search by
- Manufacturer
- Article number
- Product type

Operation with local display

Overview

A 1-line liquid crystal display (LCD) is used for display and operation. The local display shows measured values, fault messages and information messages and therefore supports the user through each operating step.

During measuring operation, the display shows measured values, fault messages and notice messages. In addition, it is possible to switch to menu mode via the operating keys.

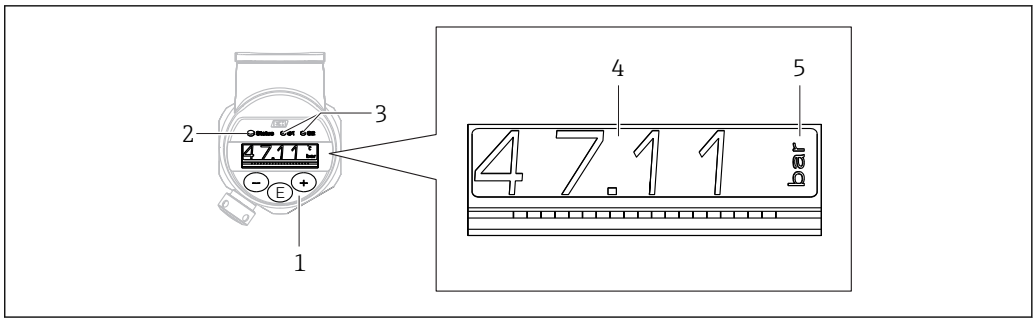

A0022121

1 Operating keys
2 Status LED
3 Switch output LEDs
4 Measured value
5 Unit

The second switch output is not used for the device version with current output.

Functions:
- 4-digit measured value display and decimal point
- Simple and complete menu guidance due to breakdown of parameters into several levels and groups
- Possibility to configure the display in accordance with individual wishes and requirements
- Comprehensive diagnostic functions (fault and warning message, peak-hold indicators, etc.)
- Quick and safe commissioning
- The device also signals the status via LEDs.

Information on the operational states

Operational states	Function of status-LED and onsite display
Operation	▪ Status LED is lit green ▪ LEDs of switch output 1 and switch output 2 signal the status of each switch output ▪ No activity of LED for switch output 2 if current output is active ▪ White background lighting
Problem	▪ Status LED lit steady red ▪ Red display background ▪ LED of switch output 1 and switch output 2 off (switch output is deactivated)
Warning	▪ Status LED flashing red ▪ White display background ▪ LEDs of switch output 1 and switch output 2 signal the status of each switch output
For Device Search	▪ The green LED is lit (= operational) on the device and starts to flash with increased luminosity. Flash frequency ⎍⎍⎍⎍ ⎍⎍⎍⎍ ▪ LEDs of switch output 1 and switch output 2 signal the status of each switch output ▪ Display background depending on the device status
IO-Link communication	▪ Status LED flashes green as per IO-Link specification (regardless of measuring operation, error or warning). Flash frequency ⎍⎍⎍⎍ ▪ Display background depending on the device status ▪ The state of switch output 1 is also indicated via the LED of switch output 1 at the same time as the process data are displayed

Device Search (IO-Link) The Device Search parameter is used to uniquely identify the device during installation.

Functions of switch output

The switch output can be used for two-point control (hysteresis) or for monitoring a process pressure range (window function).

Hysteresis

Sample explanation. Device with two switch outputs.

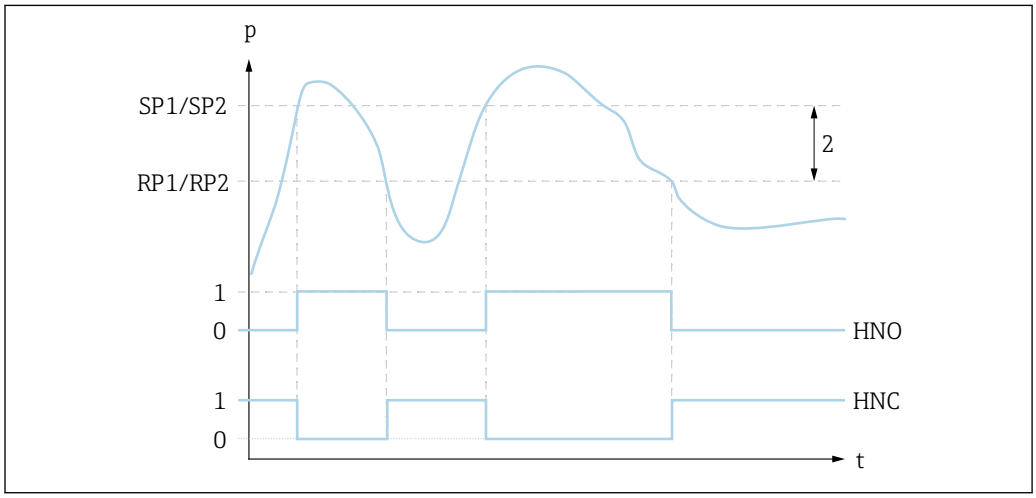

1 SP1/SP2: switch point 1/2; RP1/RP2: switch-back point 1/2

0 0-signal. Output open in quiescent state.
1 1-signal. Output closed in quiescent state.
2 Hysteresis
HNO Closing
HNC NC contact

Description

When the set switch point "SP1/SP2" is reached (with increasing pressure), an electrical signal change takes place at the switch output.

When the set switchback point "RP1/RP2" is reached (with decreasing pressure), an electrical signal change takes place at the switch output.

The difference between the value of the switch point "SP1/SP2" and the switchback point "RP1/RP2" is known as the hysteresis.

Window function

Sample explanation. Device with two switch outputs.

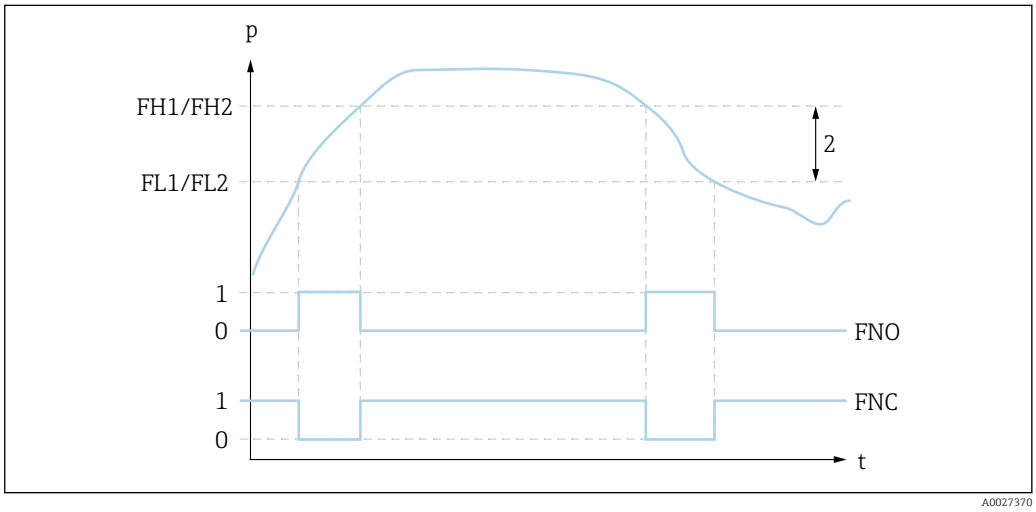

2 *FH1/FH2: upper value of pressure window; FL1/FL2: lower value of pressure window*

0 0-signal. Output open in quiescent state.
1 1-signal. Output closed in quiescent state.
2 Pressure window (difference between the value of the high window "FH1/FH2" and the low window "FL1/FL2")
FNO Closing
FNC NC contact

Description

When the lower value of the pressure window "FL1/FL2" is reached (with increasing or decreasing pressure), an electrical signal change takes place at the switch output.

When the upper value of the pressure window "FH1/FH2" is reached (with increasing or decreasing pressure), an electrical signal change takes place at the switch output.

The difference between the upper value of the pressure window "FH1/FH2" and the lower value of the pressure window "FL1/FL2" is known as the pressure window.

Certificates and approvals

CE mark

The device meets the legal requirements of the relevant EC directives. Endress+Hauser confirms that the device has been successfully tested by applying the CE mark.

RoHS

The measuring system complies with the substance restrictions of the Restriction on Hazardous Substances Directive 2011/65/EU (RoHS 2).

RCM-Tick marking

The supplied product or measuring system meets the ACMA (Australian Communications and Media Authority) requirements for network integrity, interoperability, performance characteristics as well as health and safety regulations. Here, especially the regulatory arrangements for electromagnetic compatibility are met. The products are labelled with the RCM- Tick marking on the name plate.



A0029561

Suitability for hygienic processes

All materials in contact with foodstuffs comply with framework regulation (EC) 1935/2004. The device is available with hygienic process connections (overview: see order code).

⚠ CAUTION

Contamination in the process!

Risk of contamination if incorrect seals and parts are used!

- To avoid the risk of contamination, when installing the device comply with the design principles of EHEDG, Guideline 37 "Hygienic Design and Application of Sensors" and Guideline 16 "Hygienic Pipe Couplings".
- Suitable assemblies and seals must be used to ensure hygienic design in accordance with 3-A SSI and EHEDG specifications.
- The leak-proof connections can be cleaned with the cleaning methods typical of this industry (CIP and SIP). Attention must be paid to the pressure and temperature specifications of the sensor and process connections for CIP and SIP processes (clean in place/sterilize in place).

The seamless connections can be cleaned of all residue using any of the typical cleaning methods within this industry.

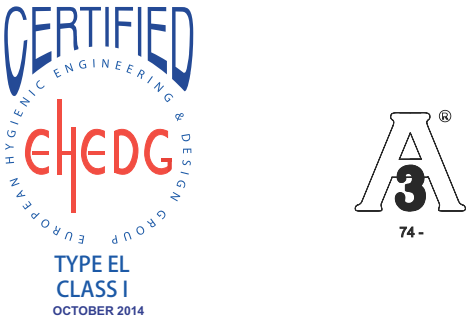

A0025304

Pressure Equipment Directive 2014/68/EU (PED)

Pressure equipment with allowable pressure ≤ 200 bar (2 900 psi)

Pressure equipment (with a maximum allowable pressure PS ≤ 200 bar (2 900 psi)) can be classified as pressure accessories in accordance with Pressure Equipment Directive 2014/68/EU. If the maximum allowable pressure is ≤ 200 bar (2 900 psi) and the pressurized volume of the pressure equipment is ≤ 0.1 l, the pressure equipment is subject to the Pressure Equipment Directive (cf. Pressure Equipment Directive 2014/68/EU, Article 4, point 3). The Pressure Equipment Directive only requires that the pressure equipment shall be designed and manufactured in accordance with the "sound engineering practice of a Member State".

Reasons:

- Pressure Equipment Directive (PED) 2014/68/EU Article 4, point 3
- Pressure equipment directive 2014/68/EU, Commission's Working Group "Pressure", Guideline A-05 + A-06

Note:

A partial examination shall be performed for pressure instruments that are part of safety equipment for the protection of a pipe or vessel from exceeding allowable limits (safety accessory in accordance with Pressure Equipment Directive 2014/68/EU, Article 2, point 4).

Manufacturer declarations

Depending on the desired configuration, the following documents can be ordered additionally with the device:

- FDA conformity
- TSE-free: materials free from animal origin
- Regulation (EC) No. 2023/2006 (GMP)
- Regulation (EC) No. 1935/2004 on materials and articles intended to come into contact with food

Downloading the Declaration of Conformity

http://www.endress.com/en/download



1. Select "Approvals & Certificates"
2. Select "Manufact. Declaration"
3. Enter the required product code
4. Click "Search"

The available downloads are displayed.

Other standards and guidelines

The applicable European guidelines and standards can be found in the relevant EU Declarations of Conformity. The following standards were also applied:

DIN EN 60770 (IEC 60770):

Transmitters for use in industrial process control systems Part 1: Methods for performance evaluation

Methods for evaluating the performance of transmitters for control and regulation in industrial process control systems.

DIN 16086:

Electrical pressure measuring instruments, pressure sensors, pressure transmitters, pressure measuring instruments, concepts, specifications on data sheets

Procedure for writing specifications in data sheets for electrical pressure measuring instruments, pressure sensors and pressure transmitters.

EN 61326-X:

EMC product family standard for electrical equipment for measurement, control and laboratory use.

EN 60529:

Degrees of protection provided by enclosures (IP code)

NAMUR - User association of automation technology in process industries.

NE21 - Electromagnetic Compatibility (EMC) of Industrial Process and Laboratory Control Equipment.

NE43 - Standardization of the Signal Level for the Failure Information of Digital Transmitters.

NE44 - Standardization of Status Indicators on PCT Instruments with the Help of Light Emitting Diodes

NE53 - Software of Field Devices and Signal-processing Devices with Digital Electronics

NE107 - Self-monitoring and Diagnosis of Field Devices

VDMA 24574-1:2008-04

Fluid technology terms, menu navigation and electrical connection for fluid sensors, Part 1: Pressure switches

CRN approval

A CRN approval is available for some device versions. A CRN-approved process connection with a CSA approval must be ordered for a CRN-approved device. The CRN-approved devices are assigned the registration number 0F18141.5C.

Ordering information: Product Configurator, order code for "Process connection" (the CRN process connections are indicated appropriately in the "Mechanical construction" section.)

Calibration unit

Designation	Option [1]
Sensor range; %	A
Sensor range; mbar/bar	B
Sensor range; kPa/MPa	C
Sensor range; psi	F
Switch 1; see additional spec.	S
Switch 1 + 2; see additional spec.	T
Switch, analog output; see additional spec.	U

1) Product Configurator, order code for "Calibration; unit"

Calibration

Designation	Option [1]
3-point certificate of calibration	F3

1) Product Configurator order code for "Calibration"

Inspection certificates

Device	Designation	Option [1]
PTP33B	3.1 Material documentation, wetted metal parts, EN10204-3.1 inspection certificate	JA
PTP33B	Surface finish measurement ISO4287/Ra, wetted metal parts, inspection certificate	KB

1) Product Configurator, order code for "Test, Certificate"

Additional approval

Device	Designation	Option [1]
PTP33B	EHEDG, certificate copy	L1
PTP33B	3A, certificate copy	L2
PTP33B	Declaration of Conformity EC1935/2004, wetted parts	L3

1) Product Configurator, order code for "Additional approval"

Ordering information

Detailed ordering information is available from the following sources:
- In the Product Configurator on the Endress+Hauser website: www.endress.com -> Click "Corporate" -> Select your country -> Click "Products" -> Select the product using the filters and search field -> Open product page -> The "Configure" button to the right of the product image opens the Product Configurator.
- From your Endress+Hauser Sales Center: www.addresses.endress.com

Product Configurator - the tool for individual product configuration
- Up-to-the-minute configuration data
- Depending on the device: Direct input of measuring point-specific information such as measuring range or operating language
- Automatic verification of exclusion criteria
- Automatic creation of the order code and its breakdown in PDF or Excel output format
- Ability to order directly in the Endress+Hauser Online Shop

Scope of delivery
- Measuring device
- Optional accessories
- Brief Operating Instructions
- Certificates

Accessories

Weld-in adapter

Various weld-in adapters are available for installation in vessels or pipes.

Device	Description	Option [1]	Order number
PTP33B	Weld-in adapter M24, d=65, 316L	PM	71041381
PTP33B	Weld-in adapter M24, d=65, 316L 3.1 EN10204-3.1 material, inspection certificate	PN	71041383
PTP33B	Weld-in adapter G1, 316L, conical metal joint	QE	52005087
PTP33B	Weld-in adapter G1, 316L, 3.1, conical metal joint, EN10204-3.1 material, inspection certificate	QF	52010171
PTP33B	Weld-in tool adapter G1, brass	QG	52005272
PTP33B	Weld-in adapter G1, 316L, silicone O-ring seal	QJ	52001051
PTP33B	Weld-in adapter G1, 316L, 3.1, silicone O-ring seal, EN10204-3.1 material, inspection certificate	QK	52011896

1) Product Configurator, order code for "Enclosed accessories"

If installed horizontally and weld-in adapters with a leakage hole are used, ensure that the leakage hole is pointing down. This allows leaks to be detected as quickly as possible.

Process adapter M24

The following process adapters can be ordered for the process connections with order option X2J and X3J:

Device	Description	Order number	Order number with inspection certificate 3.1 EN10204
PTP33B	Varivent F DN32 PN40	52023996	52024003
PTP33B	Varivent N DN50 PN40	52023997	52024004
PTP33B	DIN11851 DN40	52023999	52024006
PTP33B	DIN11851 DN50	52023998	52024005
PTP33B	SMS 1½"	52026997	52026999
PTP33B	Clamp 1½"	52023994	52024001
PTP33B	Clamp 2"	52023995	52024002

M12 plug connectors

Connector	Degree of protection	Material	Option [1]	Order number
M12 (self-terminated connection at M12 plug) 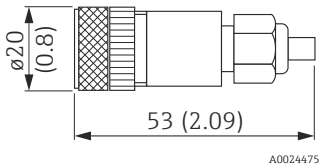	IP67	▪ Union nut: Cu Sn/Ni ▪ Body: PBT ▪ Seal: NBR	R1	52006263
M12 90 degrees with 5m (16 ft) cable 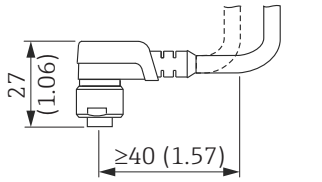	IP67	▪ Union nut: GD Zn/Ni ▪ Body: PUR ▪ Cable: PVC Cable colors ▪ 1 = BN = brown ▪ 2 = WT = white ▪ 3 = BU = blue ▪ 4 = BK = black	RZ	52010285
M12 90 degrees (self-terminated connection at M12 plug) 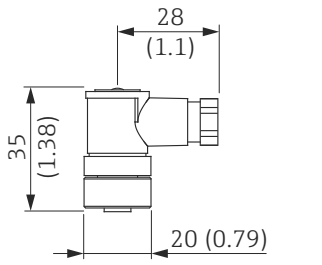	IP67	▪ Union nut: GD Zn/Ni ▪ Body: PBT ▪ Seal: NBR	RM	71114212

1) Product Configurator, order code for "Enclosed accessories"

Documentation

Field of Activities	Pressure measurement, powerful instruments for process pressure, differential pressure, level and flow: FA00004P
Technical Information	▪ TI00241F: EMC Test Procedures ▪ TI00426F: Weld-in adapters, process adapters and flanges (overview)
Operating Instructions	BA01270P Devices with IO-Link: BA01911P
Brief Operating Instructions	KA01163P Devices with IO-Link: KA01404P

Registered trademarks

IO-Link

is a registered trademark of the IO-Link company group.



www.addresses.endress.com

Endress+Hauser

People for Process Automation