Tie rod cylinder ISO 15552, Series TRB

0822306204

AVENTICS Series TRB Tie rod cylinders (ISO 15552)

The AVENTICS Series TRB (ISO 15552) cylinders are among the most frequently implemented in industries where heavy duty cylinders are required, such as wood and aluminium, steel and automotive, heavy-duty machinery and mining to name just a few.



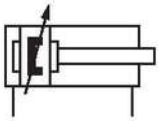

Technical data

Industry	Industrial
Standards	ISO 15552
Piston Ø	125 mm
Stroke	100 mm
Ports	G 1/2
Functional principle	Double-acting
Cushioning	Pneumatic adjustable cushioning
Magnetic piston	Piston with magnet
Environmental requirements	Industry standard ATEX optional
Piston rod thread - type	External thread
Piston rod thread	M27x2
Piston rod	single
Scraper	Standard Industry Scraper
Pressure for determining piston forces	6,3 bar
Retracting piston force	7220 N
Extracting piston force	7725 N
Min. ambient temperature	-20 °C
Max. ambient temperature	80 °C
Min. working pressure	1.5 bar

Max. working pressure	10 bar
Cushioning length	22 mm
Cushioning energy	140 J
Weight 0 mm stroke	6.92 kg
Weight +10 mm stroke	0.21 kg
Stroke max.	2750 mm
Medium	Compressed air
Min. medium temperature	-20 °C
Max. medium temperature	80 °C
Max. particle size	50 µm
Min. oil content of compressed air	0 mg/m³
Max. oil content of compressed air	5 mg/m³

Material

Piston rod	Stainless Steel
Scraper material	Polyurethane
Material tie-rod	Steel, chrome-plated
Seal material	Polyurethane
Material, front cover	Die-cast aluminum
Cylinder tube	Aluminum
End cover	Die-cast aluminum
Nut for piston rod	Steel, chrome-plated
Part No.	0822306204

Technical information

ATEX-certified cylinders with identification II 2G Ex h IIC T4 Gb / II 2D Ex h IIIC T135°C Db_X can be generated in the Internet configurator.

The operating temperature range for ATEX-certified cylinders is -20°C ... 60°C.

The pressure dew point must be at least 15 °C less than ambient and medium temperature and may not exceed 3 °C.

The oil content of compressed air must remain constant during the life cycle.

Use only the approved oils from AVENTICS. Further information can be found in the “Technical information” document (available in https://www.emerson.com/en-us/support).

Tie rod cylinder ISO 15552, Series TRB

0822306204

Dimensions

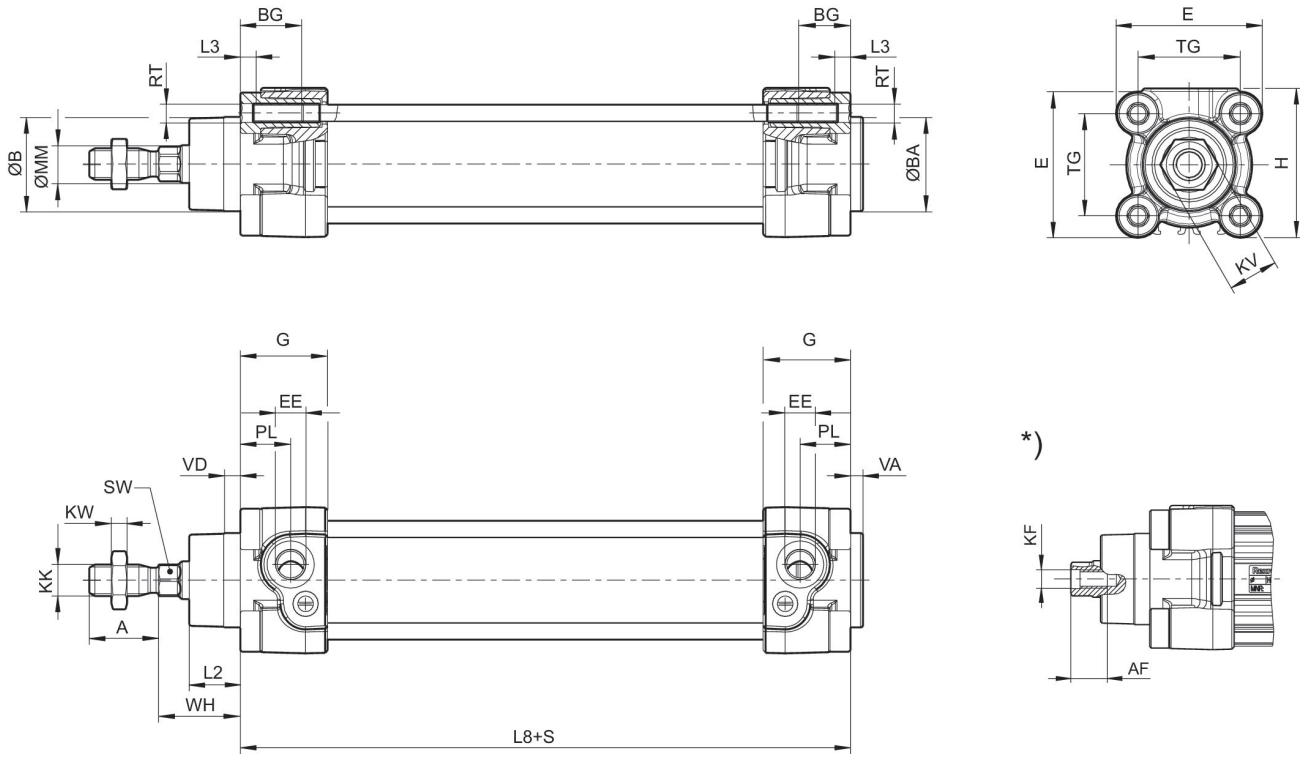

S = stroke

*) For cylinders with optional piston road with internal thread

Piston Ø	A -2	AF+1	ØB d11	ØBA d11	BG min.	E	EE	G	H
32	22	12	30	30	16	46.5	G 1/8	27.75	47.5
40	24	13.5	35	35	16	53	G 1/4	33.25	53
50	32	17	40	40	16	65	G 1/4	31	65
63	32	17	45	45	16	75	G 3/8	38.25	75
80	40	21	45	45	17	95	G 3/8	38.25	95
100	40	21	55	55	17	115	G 1/2	42.25	115
125	54	28	60	60	20	140	G 1/2	53.85	140

Piston Ø	KF	KK	KV	KW	ØMM f8	PL	L2	L3 ±0,5	L8
32	M6	M10x1,25	16	5	12	16	16.25	4.5	94±0,4
40	M8	M12x1,25	18	6	16	20	18.25	4.5	105±0,7
50	M10	M16x1,5	24	8	20	19	25	4.5	106±0,7
63	M10	M16x1,5	24	8	20	24	25	4.5	121±0,8
80	M12	M20x1,5	30	10	25	23.5	33	0	128±0,8
100	M12	M20x1,5	30	10	25	25	36	0	138±1
125	M16	M27x2	41	13.5	32	33	45	0	160±1

Piston Ø	RT	SW	TG	VA -1	VD	WH
32	M6	10	32,5±0,5	4	5	26±1,4
40	M6	13	38±0,5	4	5	30±1,4

Piston Ø	RT	SW	TG	VA -1	VD	WH
50	M8	17	46,5±0,6	4	5	37±1,4
63	M8	17	56,5±0,7	4	5	37±1,8
80	M10	22	72±0,7	4	5	46±1,8
100	M10	22	89±0,7	4	5	51±1,8
125	M12	27	110±1,1	6	7	65±2,2

Cushioning diagram

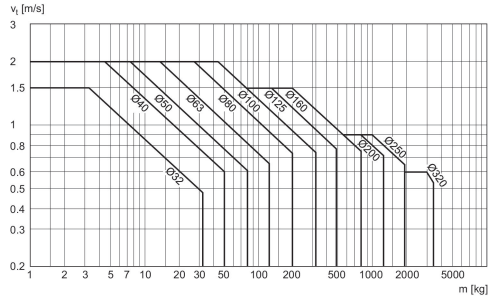

v_t = Piston velocity [m/s] m = Cushionable mass [kg]

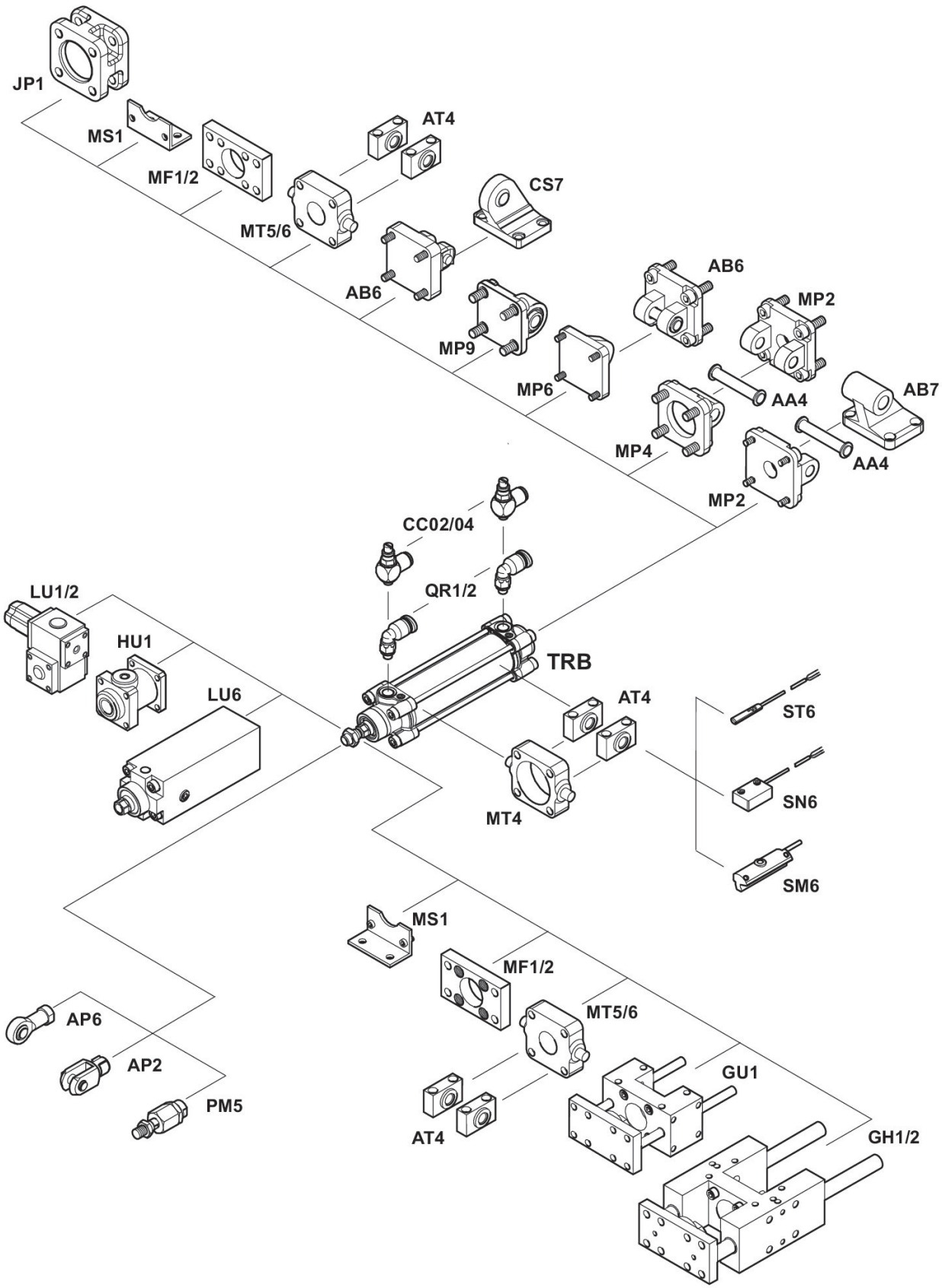
JP1
MS1
MF1/2
MT5/6
AT4
CS7
AB6
MP9
MP6
AB6
MP2
AA4
AB7
MP4
AA4
MP2
CC02/04
QR1/2
LU1/2
HU1
LU6
TRB
AT4
MT4
ST6
SN6
SM6
MS1
MF1/2
MT5/6
AP6
AP2
PM5
AT4
GU1
GH1/2