Powering Business Worldwide

05/21 IL034092ZU

Instruction Leaflet
Montageanweisung
Notice d'installation
Instrucciones de montaje
Istruzioni per il montaggio
安装说明
Инструкция по монтажу
Montagehandleiding
Montagevejledning
Οδηγίες εγκατάστασης
Instruções de montagem
Monteringsanvisning
Asennusohje
Návod k montáži
Paigaldusjuhend
Szerelési utasítás
Montāžas instrukcija
Montavimo instrukcija
Instrukcja montażu
Navodila za montažo
Návod na montáž
Монтажни инструкции
Instrucțiuni de montaj
Upute za montažu
Montaj talimatı
Інструкція з монтажу
منشـــور التعليمـــات

(en) **Electric current! Danger to life!**
Only skilled or instructed persons may carry out the following operations.

(de) **Lebensgefahr durch elektrischen Strom!**
Nur Elektrofachkräfte und elektrotechnisch unterwiesene Personen dürfen die im Folgenden beschriebenen Arbeiten ausführen.

(fr) **Tension électrique dangereuse !**
Seules les personnes qualifiées et averties doivent exécuter les travaux ci-après.

(es) **¡Corriente eléctrica! ¡Peligro de muerte!**
El trabajo a continuación descrito debe ser realizado por personas cualificadas y advertidas.

(it) **Tensione elettrica: Pericolo di morte!**
Solo persone abilitate e qualificate possono eseguire le operazioni di seguito riportate.

(zh) **触电危险！**
只允许专业人员和受过专业训练的人员进行下列工作。

(ru) **Электрический ток! Опасно для жизни!**
Только специалисты или проинструктированные лица могут выполнять следующие операции.

(nl) **Levensgevaar door elektrische stroom!**
Uitsluitend deskundigen in elektriciteit en elektrotechnisch geïnstrueerde personen is het toegestaan, de navolgend beschreven werkzaamheden uit te voeren.

(da) **Livsfare på grund af elektrisk strøm!**
Kun uddannede el-installatører og personer der e instruerede i elektrotekniske arbejdsopgaver, må udføre de nedenfor anførte arbejder.

(el) **Προσοχή, κίνδυνος ηλεκτροπληξίας!**
Οι εργασίες που αναφέρονται στη συνέχεια θα πρέπει να εκτελούνται μόνο από ηλεκτρολόγους και ηλεκτροτεχνίτες.

(pt) **Perigo de vida devido a corrente eléctrica!**
Apenas electricistas e pessoas com formação electrotécnica podem executar os trabalhos que a seguir se descrevem.

(sv) **Livsfara genom elektrisk ström!**
Endast utbildade elektriker och personer som undervisats i elektroteknik får utföra de arbeten som beskrivs nedan.

(fi) **Hengenvaarallinen jännite!**
Vain pätevät sähköasentajat ja opastusta saaneet henkilöt saavat suorittaa seuraavat työt.

(cs) **Nebezpečí úrazu elektrickým proudem!**
Níže uvedené práce smějí provádět pouze osoby s elektrotechnickým vzděláním.

(et) **Eluohtlik! Elektrilöögioht!**
Järgnevalt kirjeldatud töid tohib teostada ainult elektriala spetsialist või elektrotehnilise instrueerimise läbinud personal.

(hu) **Életveszély az elektromos áram révén!**
Csak elektromos szakemberek és elektrotechnikában képzett személyek végezhetik el a következőkben leírt munkákat.

(lv) **Elektriskā strāva apdraud dzīvību!**
Tālāk aprakstītos darbus drīkst veikt tikai elektrospeciālisti un darbam ar elektrotehniskām iekārtām instruētās personas!

(lt) **Pavojus gyvybei dėl elektros srovės!**
Tik elektrikai ir elektrotechnikos specialistai gali atlikti žemiau aprašytus darbus.

(pl) **Porażenie prądem elektrycznym stanowi zagrożenie dla życia!**
Opisane poniżej prace mogą przeprowadzać tylko wykwalifikowani elektrycy oraz osoby odpowiednio poinstruowane w zakresie elektrotechniki.

(sl) **Življenjska nevarnost zaradi električnega toka!**
Spodaj opisana dela smejo izvajati samo elektrostrokovnjaki in elektrotehnično poučene osebe.

(sk) **Nebezpečenstvo ohrozenia života elektrickým prúdom!**
Práce, ktoré sú nižšie opísané, smú vykonávať iba elektroodborníci a osoby s elektrotechnickým vzdelaním.

(bg) **Опасност за живота от електрически ток!**
Операциите, описани в следващите раздели, могат да се извършват само от специалисти-електротехници и инструктиран електротехнически персонал.

(ro) **Atenție! Pericol electric!**
Toate lucrările descrise trebuie efectuate numai de personal de specialitate calificat şi de persoane cu cunoştiinţe profunde în electrotehnică.

(hr) **Opasnost po život uslijed električne struje!**
Radove opisane u nastavku smiju obavljati samo stručni električari i osobe koje su prošle elektrotehničku obuku.

(tr) **Elektrik akımı! Hayati tehlike!**
Aşağıdaki işlemleri yalnızca kalifiye veya eğitimli kişiler gerçekleştirebilir.

(uk) **Електричний струм! Небезпечно для життя!**
Виконувати означені далі операції дозволяється тільки кваліфікованим особам, що пройшли інструктаж.

(ar) **تحـذير ! تيـار كهربـائي ! خطـر مـوت !**
لا تتـــم اعمـــال الصـــيانة و التركيـــب
! الا مـــن قبـــل العـــاملين المـــدربين

RAM05-xxxxEIP
RAM05-xxxxPNT

Eaton.com/documentation
MN034004…

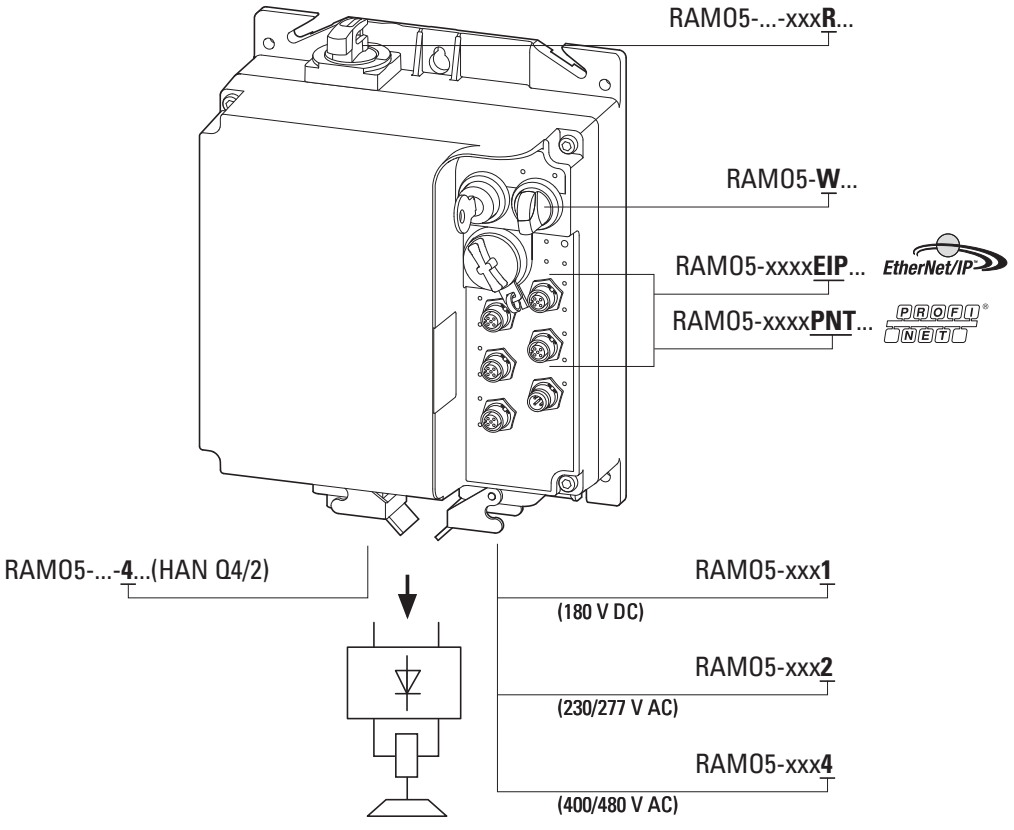

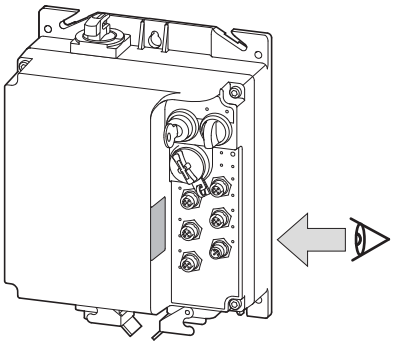

RAM05-W 4 2 2 PNT-4 12 R S1

- 0 = No Repair switch
  R = Repair switch
- 4 = HAN Q4/2
- PNT = Profinet
  EIP = Ethernet/IP
- 0 = No atcuation for motor brakes
  1 = 180 V DC control voltage for external motor brakes
  2 = 230/277 V AC control voltage for external motor brakes
  4 = 400/480 V AC control voltage for external motor brakes
- 2 = 2 Actuator outputs
- 4 = 4 Sensor inputs
- D = DOL starter
  W = Reversing starter

RAM05-…-xxx0xx

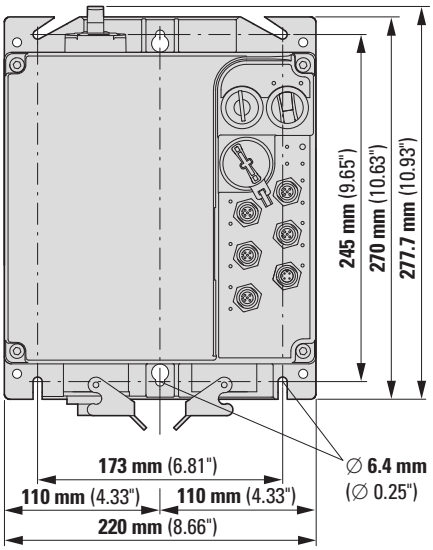

RAM05-…-xxx0xx

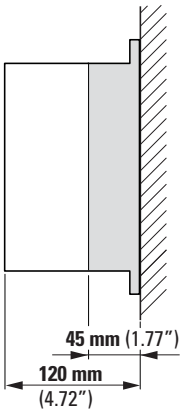

RAM05-…-xxxRxx

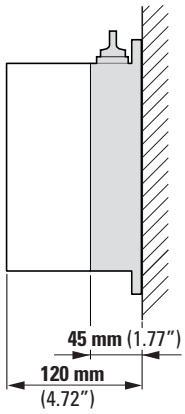

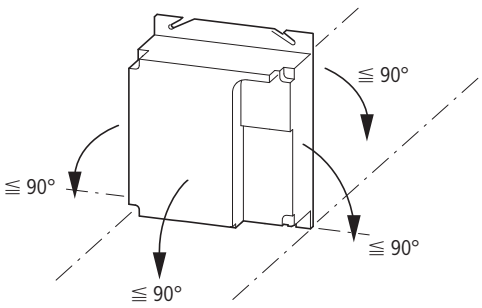

kg

RAM05-xx0xxxx-xxx0xx	1.63
RAM05-xx1xxxx-xxx0xx	1.64
RAM05-xx0xxxx-xxxRxx	1.8
RAM05-xx1xxxx-xxxRxx	1.81

05/21 IL034092ZU

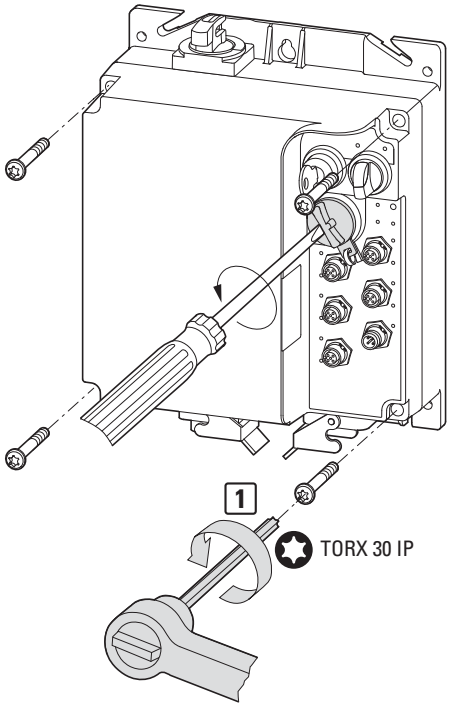

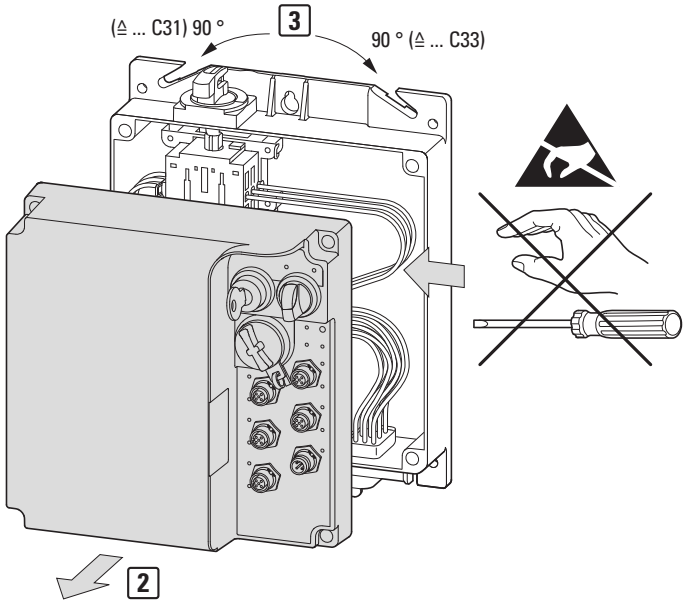

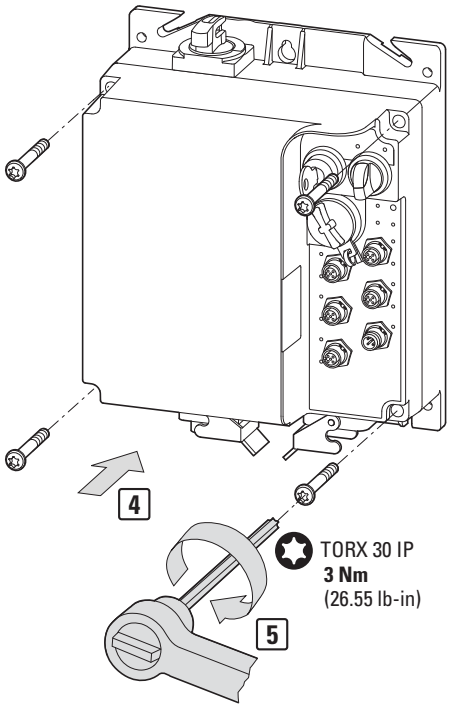

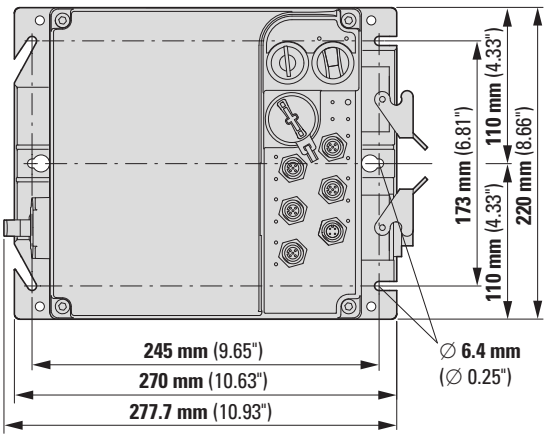

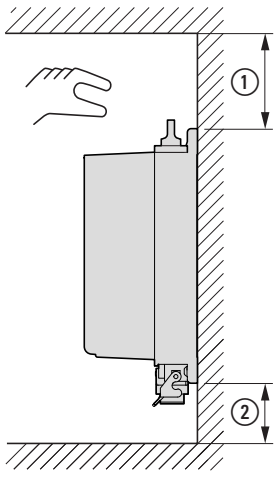

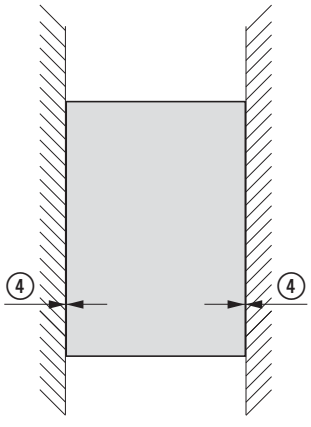

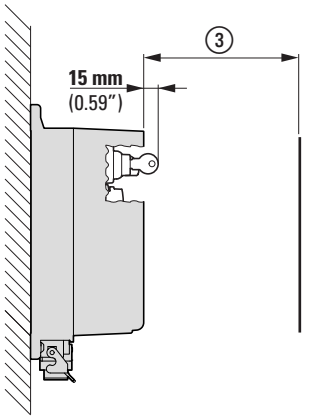

① **≧ 150 mm** (≧ 5.91“)
② **≧ 100 mm** (≧ 3.94“)
③ **≧ 20 mm** (≧ 0.79“)
④ **≧ 0**

05/21 IL034092ZU

1a

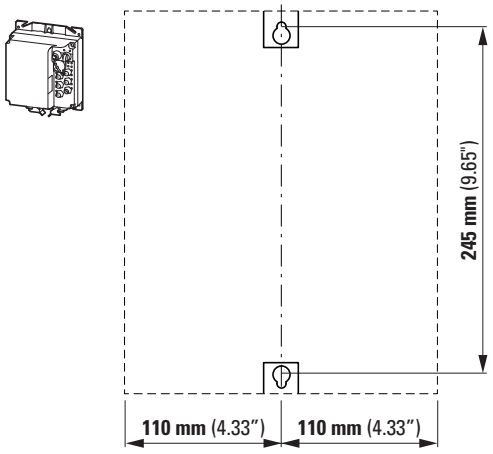

1a

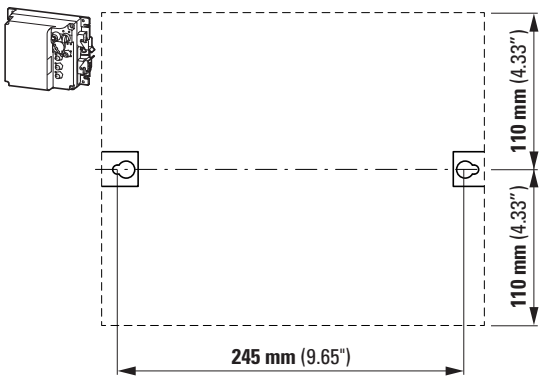

1b

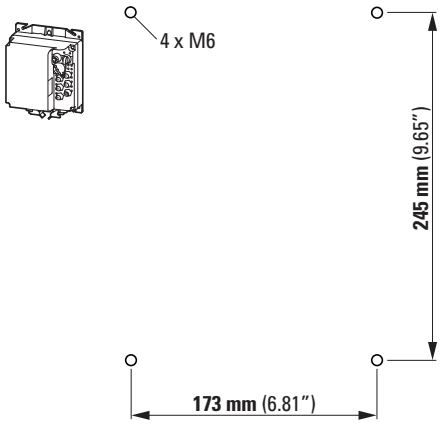

1b

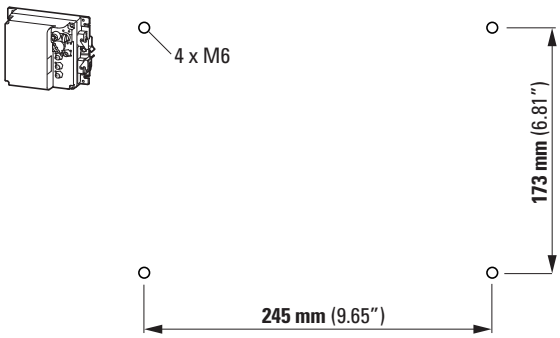

2

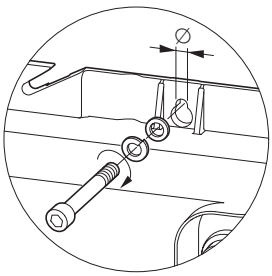

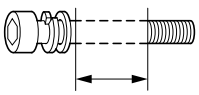

Ø			
6.2 mm (0.24")	2 x / 4 x M6	4 x DIN 127, M6	4 x DIN 125, M6

3

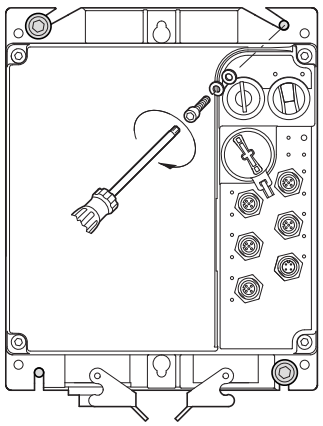

3

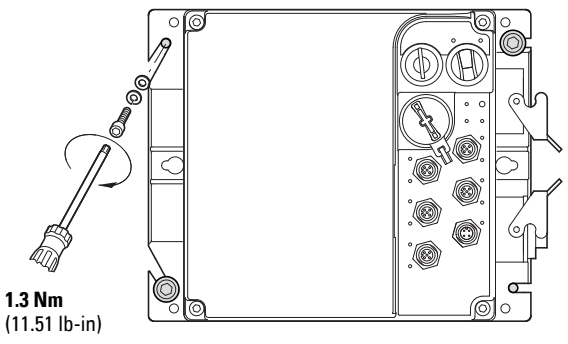

05/21 IL034092ZU

(en) *NOTICE*
Connect only in voltage-free state!

(de) *ACHTUNG*
Nur im spannungsfreien Zustand anschließen!

(fr) *ATTENTION*
Raccordez l'appareil uniquement hors tension !

(es) *CUIDADO*
¡Conectar únicamente en estado sin tensión!

(it) *AVVISO*
Collegare solo in assenza di tensione!

(zh) 注意
必须在断电状态下进行连接!

(ru) *ВНИМАНИЕ*
Подключать только в обесточенном состоянии!

(nl) *OPGELET*
Alleen in spanningsloze toestand aansluiten!

(da) *VIGTIGT*
Må kun tilsluttes i spændingsfri tilstand!

(el) *ΕΠΑΓΡΥΠΝΗΣΗ*
Συνδέστε μόνο όταν δεν επικρατεί τάση!

(pt) *ADVERTÊNCIA*
Ligar apenas com a tensão desligada!

(sv) *OBSERVERA*
Får endast anslutas i spänningsfritt tillstånd!

(fi) *ILMOITUS*
Kytke vain jännitteettömässä tilassa!

(cs) *UPOZORNĚNÍ*
Připojujte jen při zcela odpojeném napájení!

(et) *TÄHELEPANU*
Ühendada ainult pingevabas olekus!

(hu) *FIGYELEM*
Csak feszültségmentes állapotban csatlakoztassa!

(lv) *UZMANĪBU*
Pieslēgt tikai tad, kad nenotiek sprieguma padeve!

(lt) *DĖMESIO*
Prijungti tik tada, kai išjungta įtampa!

(pl) *UWAGA*
Podłączać zawsze po uprzednim odłączeniu od zasilania elektrycznego!

(sl) *POZOR*
Napravo priključite le, ko ni pod napetostjo!

(sk) *UPOZORNRNIE*
Napájat' len v stave bez napätia!

(bg) *ПРЕДУПРЕЖДЕНИЕ*
Свързвайте само, когато уреда не е под напрежение!

(ro) *ATENTJE*
Conectați doar când aparatul nu se află sub tensiune!

(hr) *POZOR*
Priključujte samo u beznaponskom stanju!

(tr) *BİLDİRİM*
Sadece gerilim sıfırken bağlayın!

(uk) *ПОВІДОМЛЕННЯ*
Підключати лише за відсутності напруги!

(ar) *ملاحظة*
التوصيل فقط في حال عدم الفولتية!

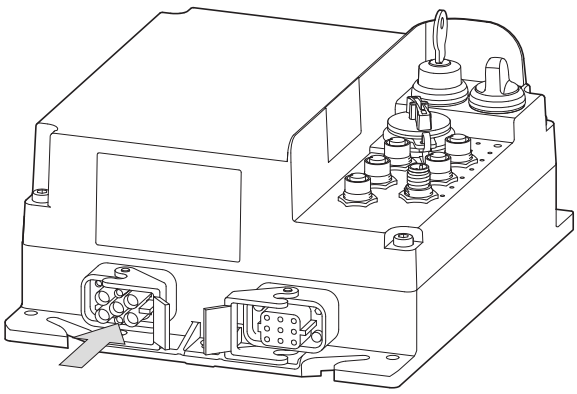

Mains (TN, TT)

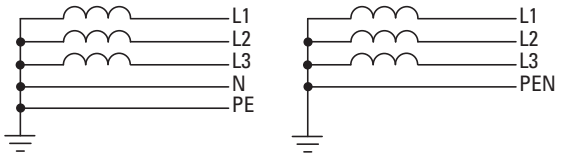

U_{LN} = 3 AC 400 V, N, PE
400 V -15 %…480 V +10 %
50/60HZ (45…66 Hz ±0%)

HAN Q4/2 M

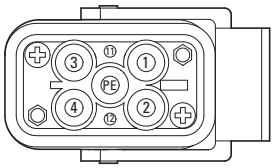

PIN	400/480 V AC
1	L1
2	L2
3	L3
4	(N)
PE	PE
11	–
12	–

HAN Q4/2 F

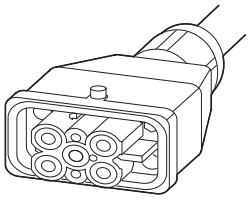

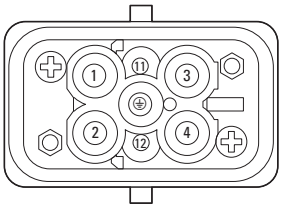

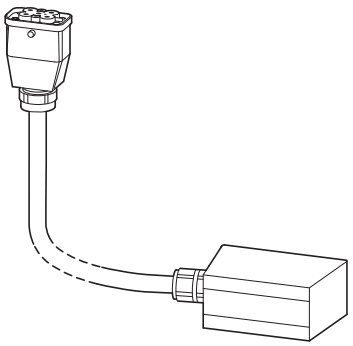

RA-Q4/C1-1M5
→ RA-C1-PLF1

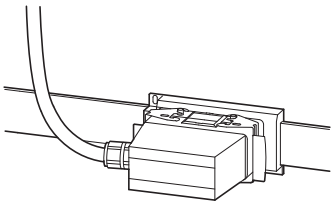

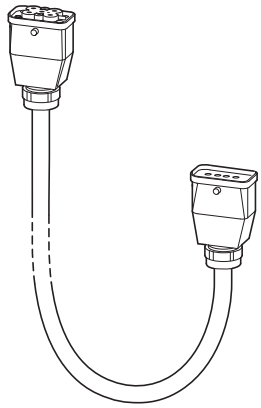

RA-Q4/C2-1M5
→ RA-C2-S1-4

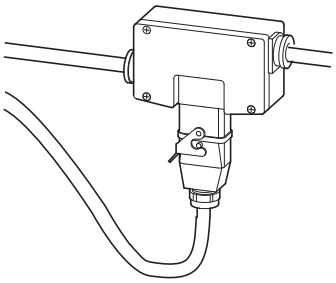

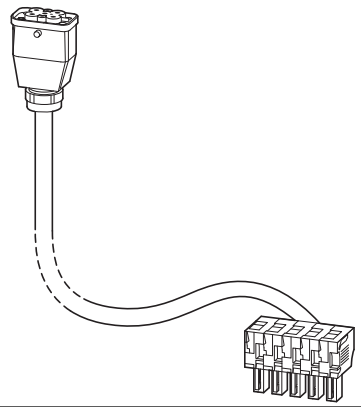

→ RA-C4-PB65

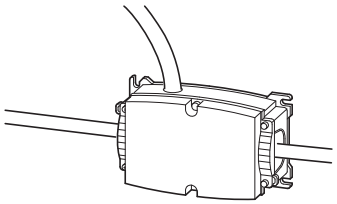

05/21 IL034092ZU

Motor

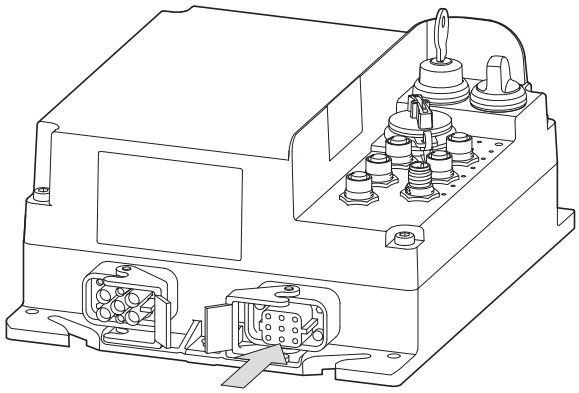

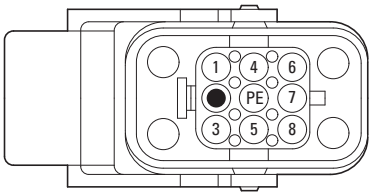

PIN	400 V AC/480 V AC		230 V AC / 400 V AC 277 V AC / 480 V AC
	M 3~	ϑ	
1	U		
●			
3	W		
4			B2
5		T1	
6			B1
7	V		
8		T2	
PE	PE		

Motor connection plug

RAMO-CM1-2M0
RAMO-CM1-5M0
RAMO-CM1-10M



Plastic housing

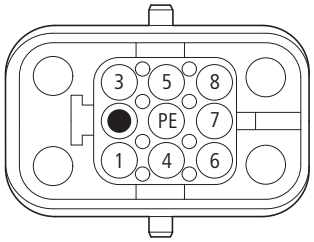

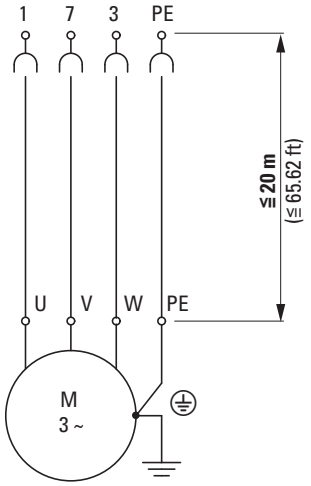

05/21 IL034092ZU

RAM05-xxx1…

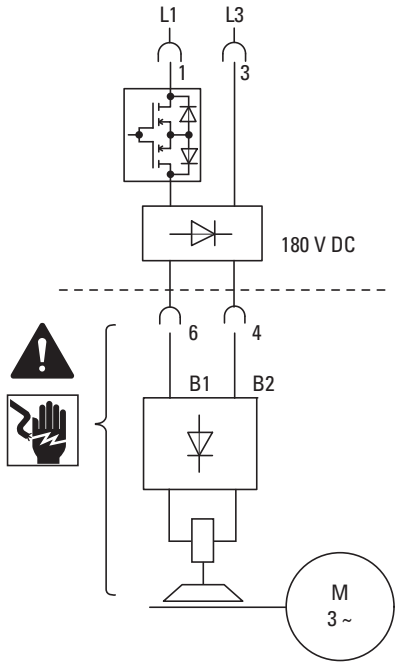

RAM05-xxx2…

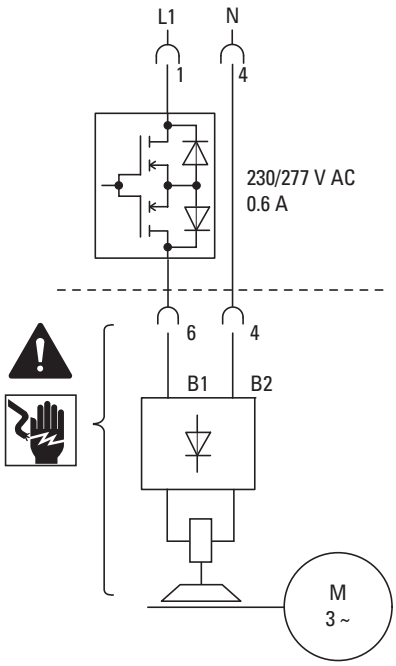

RAM05-xxx4…

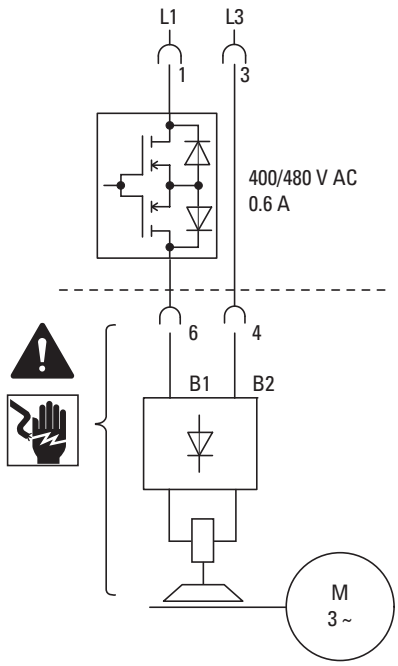

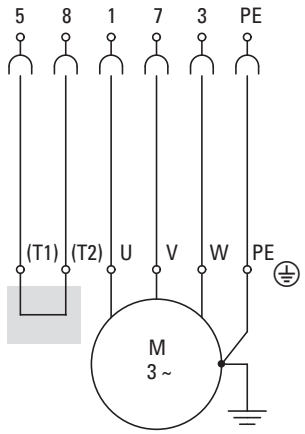

RAM05-…

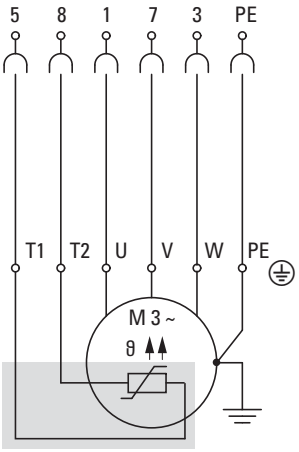

RAM05-…

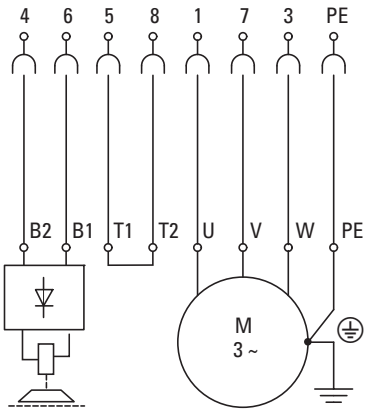

RAM05-xxx1…, RAM05-xxx2…, RAM05-xxx4…

RAM05-…-xxxRxx

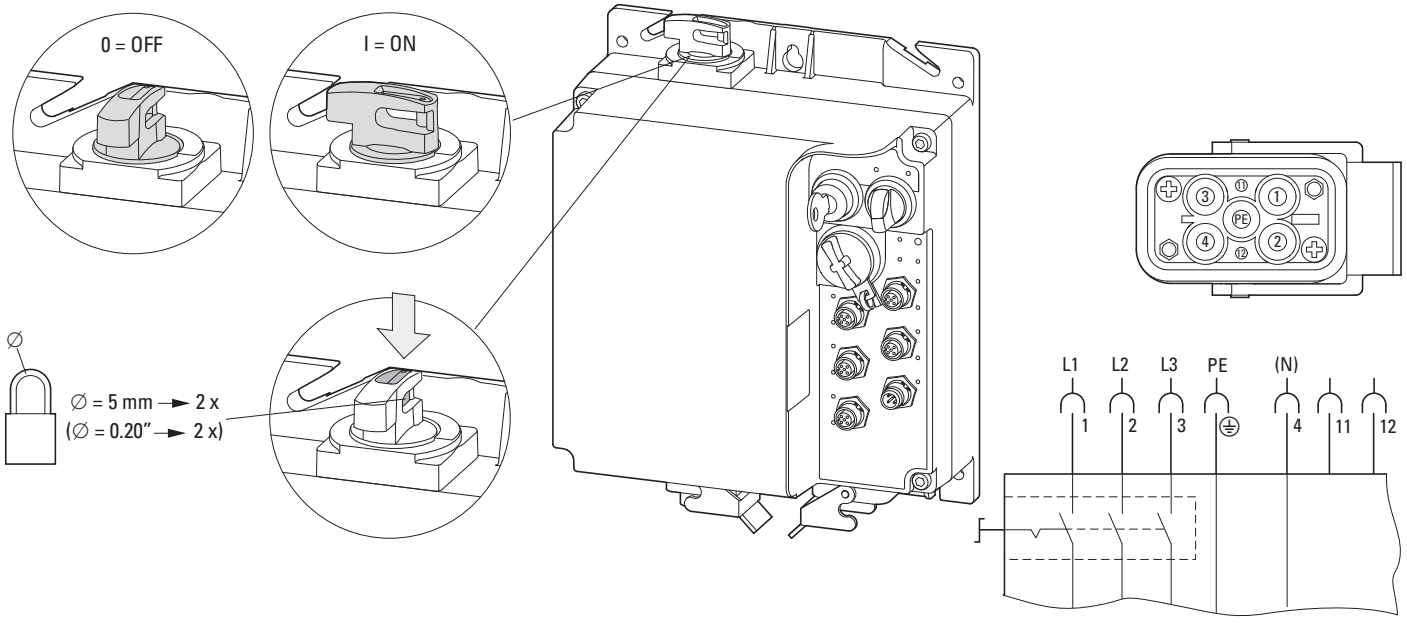

05/21 IL034092ZU

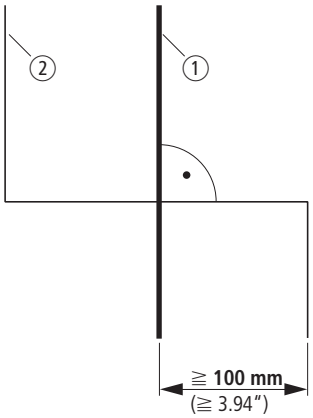

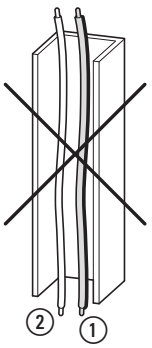

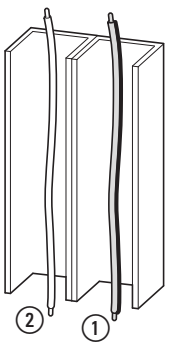

① = M 3~

② = I1, I2 , I3, I4, Q1, Q2
24 V DC

EtherNet/IP™

PROFINET®

M12

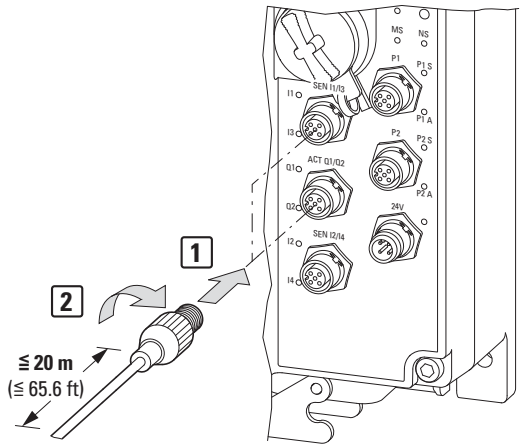

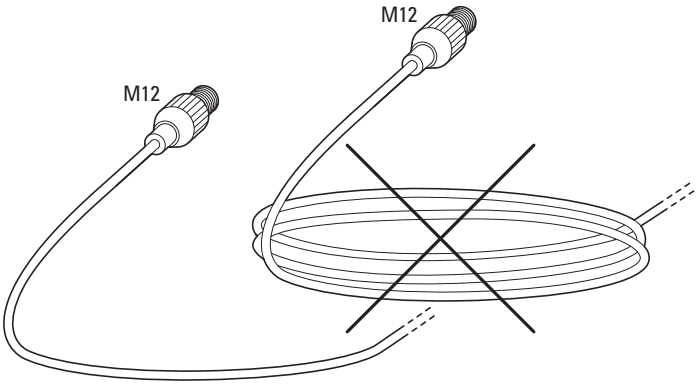

P1, P2

"D" coded

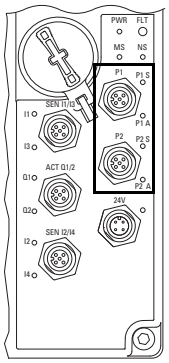

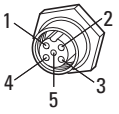

1	TD+
2	RD+
3	TD-
4	RD-
5	⏚

EtherNet/IP™

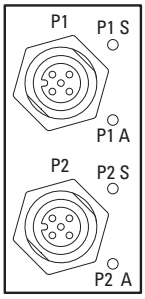

PROFINET®

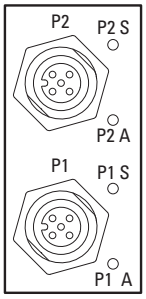

Actuator outputs: Q1, Q2

"B" coded

RAMO5-Dx2…,
RAMO5-Wx2…

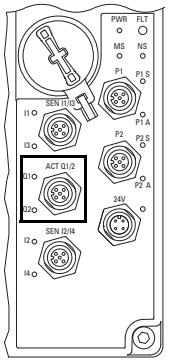

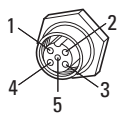

1	0 V	Q2
2	+24 V DC	Q2 (≦ 1 A)
3	0 V	Q1
4	+24 V DC	Q1 (≦ 1 A)
5	–	

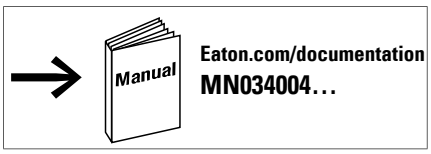

05/21 IL034092ZU

Sensor inputs: I1, I2, I3, I4

"A" coded

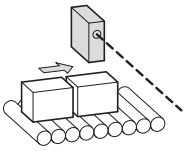

→ DIN IEC 304, DIN IEC 757		
1	BN	1
2	WH	9
3	BU	6
4	BK	0
5	–	–

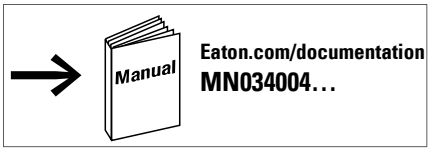

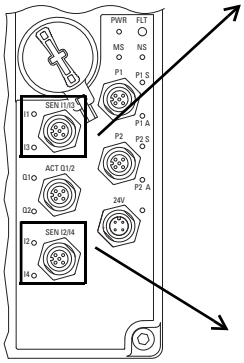

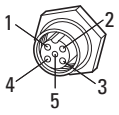

1	+24 V DC/160 mA
2	I3
3	0 V
4	I1
5	–

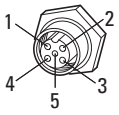

1	+24 V DC/160 mA
2	I4
3	0 V
4	I2
5	–

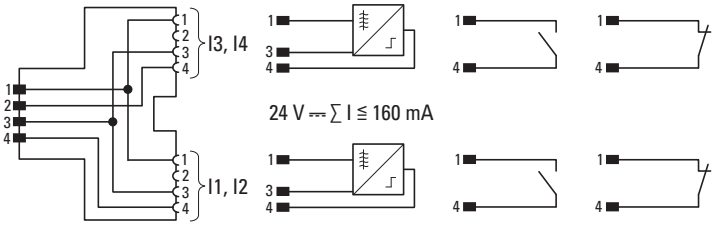

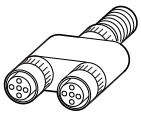

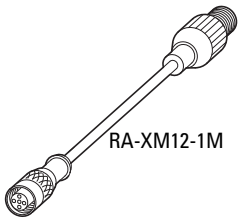

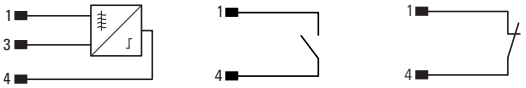

05/21 IL034092ZU

External control voltage: 24 V DC

"A" coded

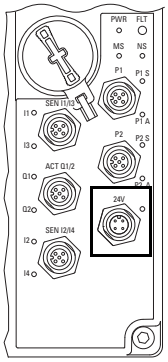

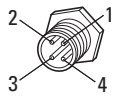

1	–
2	–
3	0 V
4	+24 V DC

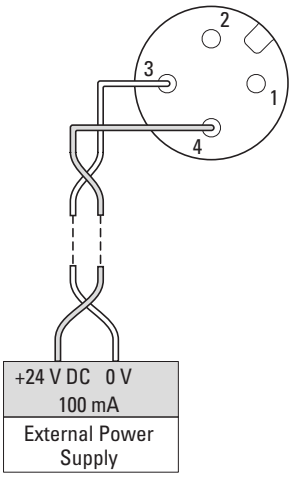

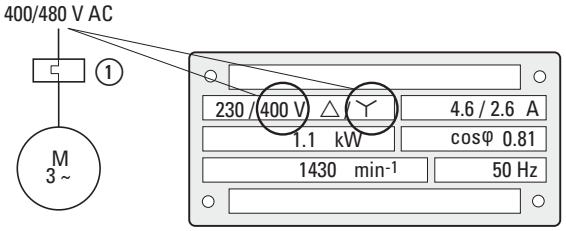

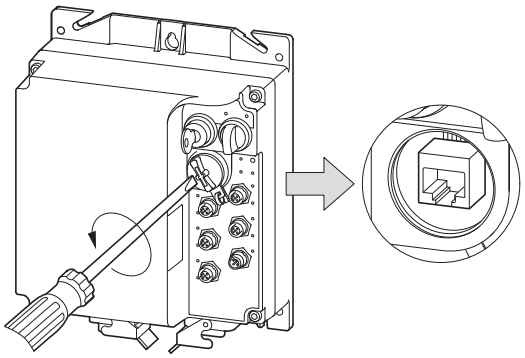

M32 x 1.5
2 Nm (17.7 lb-in)

4

14 x 2.5 mm

RJ 45 plug

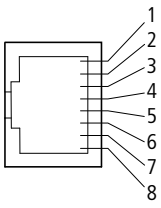

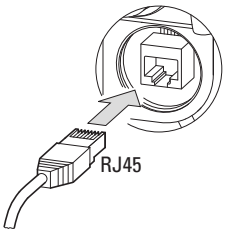

DX-CBL-PC-3M0
DX-KEY-OLED
DX-KEY-LED2
DX-COM-STICK3-KIT

Eaton.com/documentation

DX-KEY-OLED, DX-KEY-LED2
IL04012020Z

DX-CBL-PC-3M0
IL040025ZU

DX-COM-STICK3-KIT
IL040051ZU

DX-CBL-PC-3M0

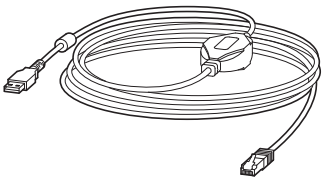

DX-KEY-OLED

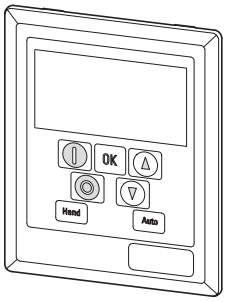

DX-KEY-LED2

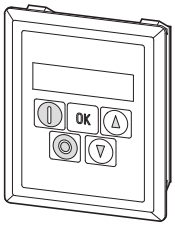

DX-COM-STICK3-KIT

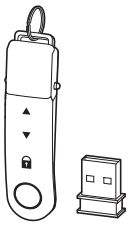

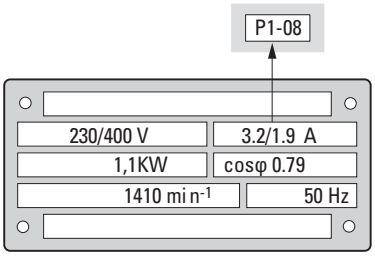

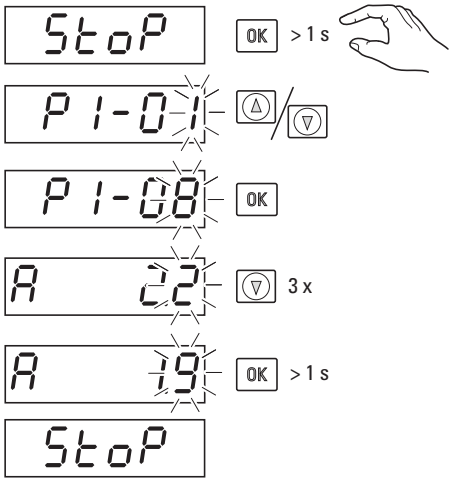

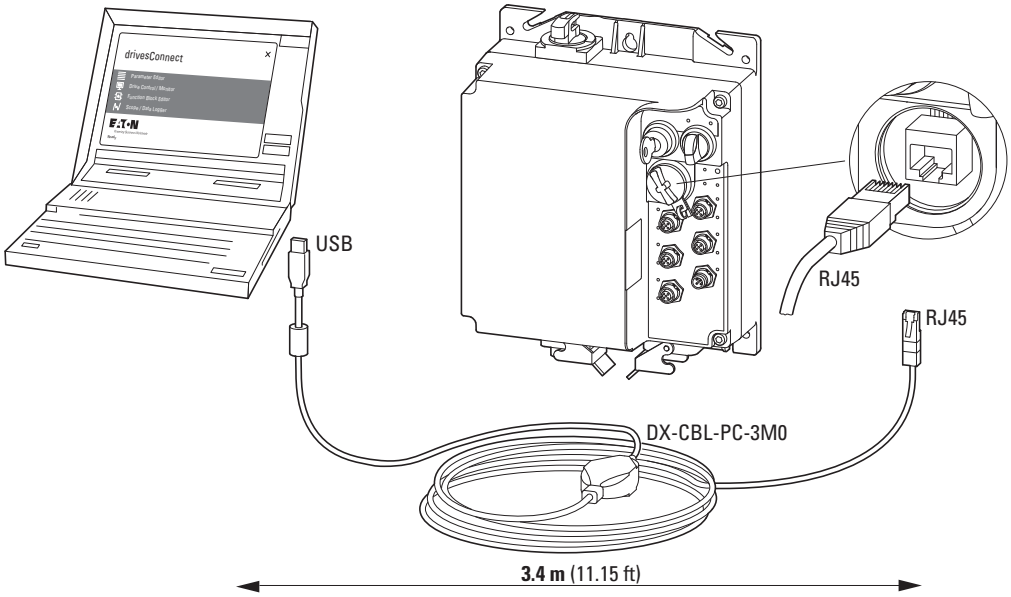

Eaton.eu/software
→ Driver
→ DrivesConnect

05/21 IL034092ZU

RAMO5-D…

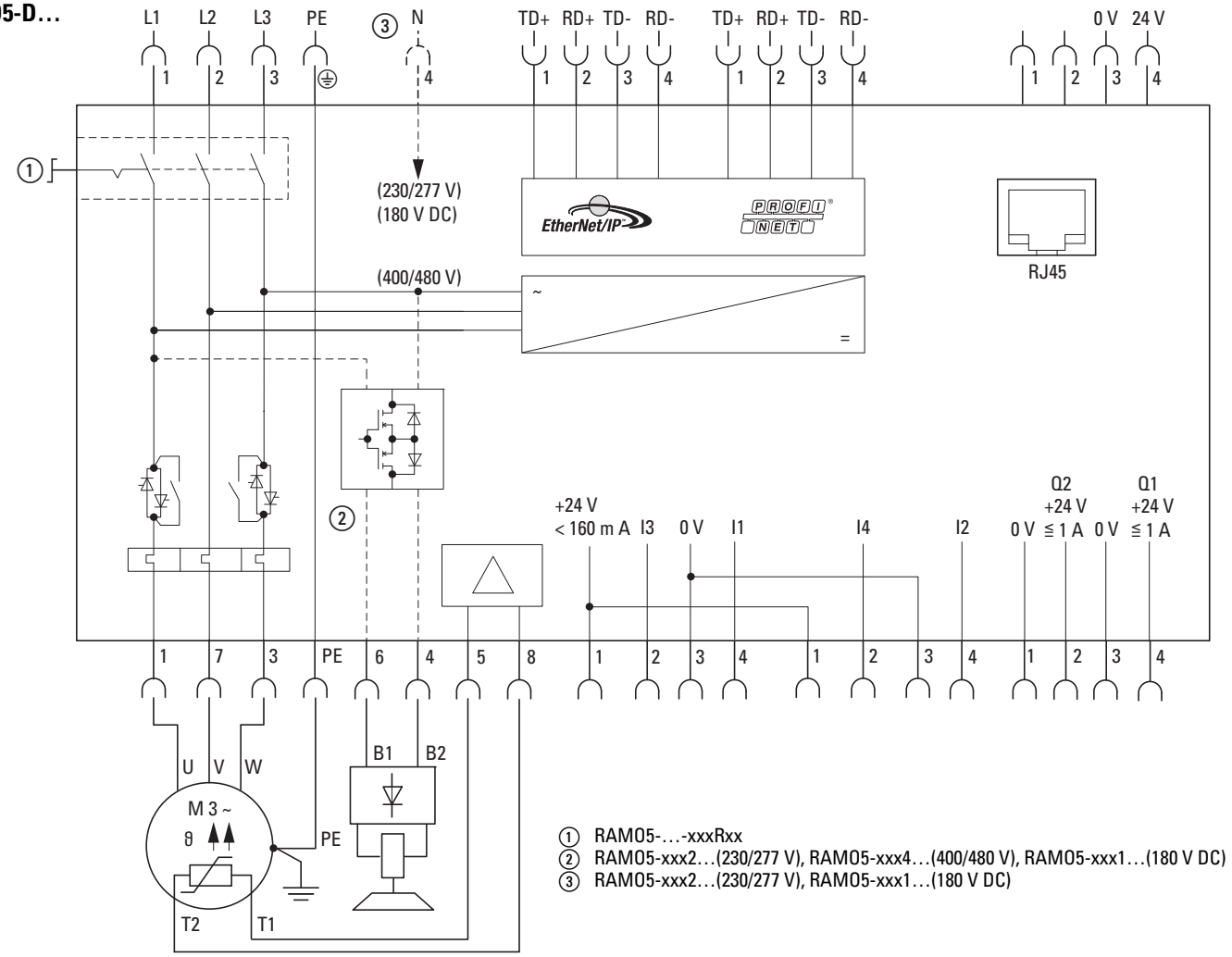

① RAMO5-…-xxxRxx
② RAMO5-xxx2…(230/277 V), RAMO5-xxx4…(400/480 V), RAMO5-xxx1…(180 V DC)
③ RAMO5-xxx2…(230/277 V), RAMO5-xxx1…(180 V DC)

RAMO5-W…

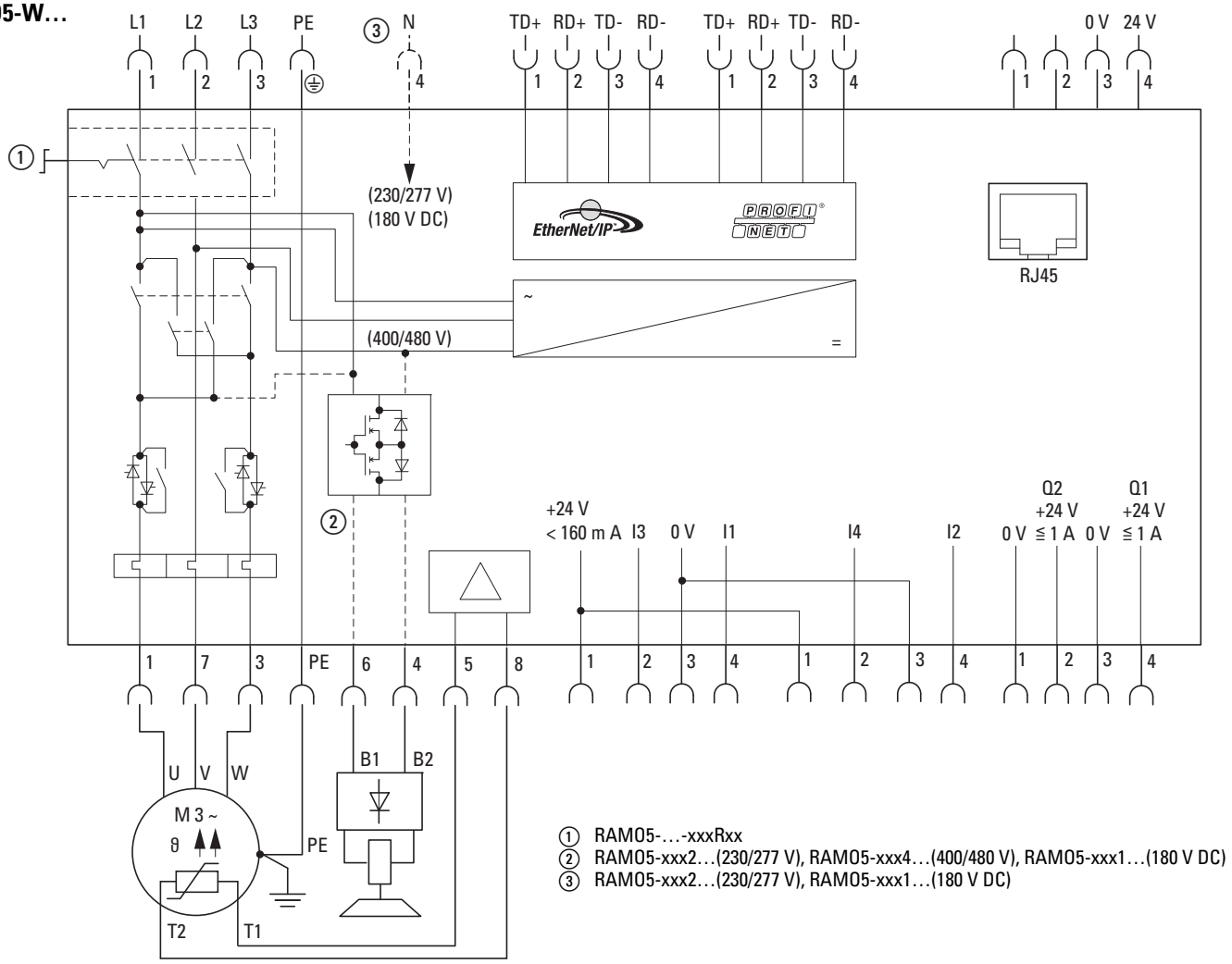

① RAMO5-…-xxxRxx
② RAMO5-xxx2…(230/277 V), RAMO5-xxx4…(400/480 V), RAMO5-xxx1…(180 V DC)
③ RAMO5-xxx2…(230/277 V), RAMO5-xxx1…(180 V DC)

05/21 IL034092ZU

UL® Cautions, Warnings and Instructions

UL® File: E251034
UL61800-5-1
CSA C22.2 No 274

General

- These devices are enclosed type AC motor starters incorporating semiconductor switching means.
- These devices are intended for installation on industrial machines in accordance with Standard for Industry Machinery NFPA79.
- These devices do not provide reduced voltage starting feature.
- These devices do not provide isolation (isolating function).
- These devices do provide motor overload protection with thermal memory and phase-loss protection.
- These devices or control units have not been evaluated as providing a safety or limiting feature.
- These devices are for installation in overvoltage category III and pollution degree 3.
- Auxiliary control outputs intended to device resistive load.

Electrical ratings

Model – 400 V range		Input (3-phase)	Output (3-phase)			BCP Fuse/Breaker
Frame size	Model number	FLA	FLA	Power kW	Power HP	A
1A	RAMO5	6.6	6.6	3	3.0	30

Frame size 1A = no external fan fitted.
Input voltage 380 - 480/277 V AC, 50/60 Hz
Output voltage 380 - 480 V AC, 50/60 Hz

Short circuit rating

Model	Short circuit rating (kA)	
	Fuses (J-Type)	Breakers (Type C)
RAMO5	100 kA	10 kA
RAMO5-…-xxxRxx (with repair switch)	10 kA	10 kA

NOTICE

Suitable for use on a circuit capable of delivering not more than 100 000 rms symmetrical amperes, 480 volts maximum. Suitable for motor group installation. When protected by J class fuses rated 30 A.

Suitable for use on a circuit capable of delivering not more than 10 000 rms symmetrical amperes, 480 volts maximum. Suitable for motor group installation. When protected by a circuit breaker having an interrupting rating not less than 10 000 rms symmetrical amperes, 480 volts maximum, rated 32 A.

- Wiring terminals marked to indicate proper connections for the power supply, load and control circuit.
- Use 60/75 °C copper field wiring conductors.
- The ground terminals are marked with “G”, “GR”, “GRD”, “Ground”, “Grounding”, “PE”, or the like. The symbol 5019. IEC publication 417, may be used, but if used alone the symbol shall be defined in the installation instructions provided with the equipment.

Environmental ratings

- Maximum ambient air temperature: 55 °C
- Enclosure type 12

WARNING

The opening of the branch-circuit protective device may be an indication that a fault has been interrupted. To reduce the risk of fire or electric shock, current-carrying parts and other components of the controller should be examined and replaced if damaged.

For Canadian installations

AVERTISSEMENT

L’ouverture du dispositif de protection de la dérivation peut signifier qu’un courant de défaut a été interrompu. Pour réduire le risque d’incendie ou de choc électrique, les pièces porteuses de courant et autres composants du contrôleur devraient être examinées et remplacées s’ils sont endommagés.

05/21 IL034092ZU

© 2020 Eaton Industries GmbH
EU: Eaton Industries GmbH, Hein-Moeller-Straße 7-11, 53115 Bonn, Germany
UK: Eaton Electric Ltd., P.O. Box 554, Abbey Park, Southampton Road, Titchfield, PO14 4QA, United Kingdom
USA:
Eaton.com/eatoncare
+1 877-386-2273
Eaton.com/contacts
Eaton.com/aftersales
Eaton.com/documentation