Series 95000, 2/2
Direct solenoid actuated poppet valve

- Port size: 1/4" (ISO G or NPT), G1/2
- Working from 0 bar up
- Short switching times
- Suited for fine vacuum down to 1,33 x 10^{-2} mbar
- For a.c. solenoid systems with integrated rectifier (40 ... 60 Hz)
- Variable valve solenoid combination
- All valves are available with Ex-protected coils, certified according to ATEX, IECEx, or other international standards



Technical features

Medium:
For neutral gaseous and liquid fluids (with contaminated fluids, upstream installation of a dirt trap is recommended)

Operation:
Direct solenoid operated poppet valve

Operating pressure:
0 ... 40 bar (0 ... 580 psi)

Orifice:
1,5 ... 12 mm

Port size:
G1/4, G1/2, 1/4 NPT

Flow direction:
Fixed

Mounting position:
Optional, preferably with solenoid on top

Ambient/Media temperature:
NBR:
-25 ... +80°C (-13 ... +176°F)
FPM:
-10...+120°C (+14 ... +248°F)
Water +95°C (+203°F)
EDPM:
-40... +140°C (-40 ... +284°F)
FFPM:
-10....+140°C (+14 ... +284°F)
PTFE:
-50....+180°C (-58 ... +356°F)
Depending on solenoid system and seal materials.
Air supply must be dry enough to avoid ice formation at temperatures below +2°C (+35°F).

Material:
Housing: brass 2.0401 (Ms 58)
Seals: NBR
other see option selector
Inner parts: stainless steel 1.4104 (430 F), brass 2.0401 (Ms 58)

Further versions
Operating pressure to 50 bar;
Seat seals FPM, EPDM, FFPM, PTFE, Rubin;
Assembled oil and grease-free

Flow conversion:
Cv US Gallon/min (water) = l/min (air) x 0,001
Kv m^3/h (water) = l/min (air) x 0,000906

Technical data
Housing: Brass, Seals: NBR -25 ... +80°C (-13 ... +176°F)

Symbol	Port size	Orifice (mm)	Flow (l/min)	Operating pressure (bar)	(psi)	Weight (kg)	(lbs)	Dimension No.	Solenoid group	Model *1)
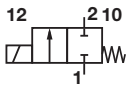	G1/4	1,5	70	0 ... 40	0 ... 580	0,21	0.46	1	13B	9500100
	G1/4	2	120	0 ... 35	0 ... 507	0,21	0.46	1	13B	9500200
	1/4 NPT	2	120	0 ... 35	0 ... 507	0,21	0.46	1	13B	9503200
	G1/4	3	200	0 ... 10	0 ... 145	0,21	0.46	1	13C	9500300
	1/4 NPT	3	200	0 ... 10	0 ... 145	0,21	0.46	1	13C	9503300
	G1/4	4	350	0 ... 12	0 ... 174	0,21	0.46	1	13D	9500400
	1/4 NPT	4	350	0 ... 12	0 ... 174	0,21	0.46	1	13D	9503400
	G1/4	4	350	0 ... 14	0 ... 217	0,21	0.46	2	16D	9501400
	G1/4	6	550	0 ... 5	0 ... 72	0,25	0.55	2	16D	9501600
	1/4 NPT	6	550	0 ... 5	0 ... 72	0,25	0.55	2	16D	9504600
	G1/2	12	1700	0 ... 1	0 ... 14	0,8	1.76	4	16D	9501700
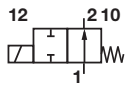	G1/4	2	100	0 ... 20	0 ... 290	0,21	0.46	3	13B	9502210
	G1/4	3	160	0 ... 10	0 ... 145	0,21	0.46	3	13B	9502310

*1) When ordering please indicate solenoid, voltage and current type (frequency).

Our policy is one of continued research and development. We therefore reserve the right to amend, without notice, the specifications given in this document. (2008 - 5120j) © 2024 Norgren GmbH

Option selector

950x★x★.★★★★.★★★★

Orifice (mm)	Substitute
1,5	1
2	2
3	3
4	4
6	6
12	7

Material seat seal	Substitute
NBR	0
EPDM	1
FPM	2
PTFE only orifice 1,5 ... 4 NC	3
FFPM	4
Rubin only orifice 2 ... 3 NC	5

Voltage	Substitute
24 V d.c.	02400
230 V a.c.	23050

Solenoid	Substitute
See solenoid table	

Our policy is one of continued research and development. We therefore reserve the right to amend, without notice, the specifications given in this document. (2008 - 5120j) © 2024 Norgren GmbH

Solenoids group 13B, standard voltages

	Power consumption		Rated current		Protection class IP/NEMA	Ex-Protection (ATEX-Category)	Temperature Ambient/Media	Electrical connection	Drawing	Circuit diagram	Model
	24 V DC (W)	230 V AC (VA)	24 V DC (mA)	230 V AC (mA)			(°C)		No.	No.	
	8,0	–	331	–	IP65 (with connector)	–	-25 ... +60 Media: +80 max.	Connector DIN EN 175301-803, form A *1)	1	1	0246
	–	9,2	–	40	IP65 (with connector)	–	-25 ... +60 Media: +80 max.	Connector DIN EN 175301-803, form A *1)	2	7	3206
	8,0	–	331	–	IP65 (with connector)	II 3G Ex ec IIC T4 Gc II 3D Ex tc IIIB T110°C Dc	-20 ... +60	Special connector incl. DIN EN 175301-803, form A	1	1	3216
	-	9,2	-	40	IP65 (with connector)	II 3G Ex ec IIC T4 Gc II 3D Ex tc IIIB T120°C Dc	-20 ... +60	Special connector DIN EN 175301-803 Form A	2	6	3218
	6,9	-	289	-	IP66	II 2G Ex mb IIC T3 Gb II 2D Ex mb IIIC T135°C Db	-20 ... +60	Cable length 3 m	5	4	0292
	-	8,7	-	34	IP66	II 2G Ex mb IIC T3 Gb II 2D Ex mb IIIC T140°C Db	-20 ... +60	Cable length 3 m	5	7	0293
	3,9	-	162	-	IP66 (with cable gland)	II 2G Ex eb mb IIC T4/ T6 Gb II 2D Ex tb IIIC T130°C Db	T4: -40 ...+80 T6: -40 ... +55 -40 ...+80	M20 x 1,5 *1)	6	4	4210
	-	5,3	-	23	IP66 (with cable gland)	II 2G Ex eb mb IIC T4/ T6 Gb II 2D Ex tb IIIC T130°C Db	T4: -40 ...+80 T6: -40 ... +55 -40 ...+80	M20 x 1,5 *1)	6	7	4211
	3,9	-	162	-	IP66 (with cable gland)	II 2G Ex db mb IIC T4/T6 Gb II 2G Ex eb mb IIC T4/T6 Gb II 2D Ex tb IIIC T130°C Db	T4: -40 ...+80 T6: -40 ... +55 -40 ...+80	1/2 NPT *1)	7	20	4610
	-	5,3	-	23	IP66 (with cable gland)	II 2G Ex db mb IIC T4/T6 Gb II 2G Ex eb mb IIC T4/T6 Gb II 2D Ex tb IIIC T130°C Db	T4: -40 ...+80 T6: -40 ... +55 -40 ...+80	1/2 NPT *1)	7	21	4611
	3,9	-	162	-	IP66 (with cable gland)	II 2G Ex db mb IIC T4/T6 Gb II 2G Ex eb mb IIC T4/T6 Gb II 2D Ex tb IIIC T130°C Db	T4: -40 ...+80 T6: -40 ... +55 -40 ...+80	M20 x 1,5 *1)	7	20	4612
	–	5,3	–	23	IP66 (with cable gland)	II 2G Ex db mb IIC T4/T6 Gb II 2G Ex eb mb IIC T4/T6 Gb II 2D Ex tb IIIC T130°C Db	T4: -40 ...+80 T6: -40 ... +55 -40 ...+80	M20 x 1,5 *1)	7	21	4613
	5,5	–	228	–	4x	Cl. I, Div. 1, Gr. A - D Cl. II/III, Div. 1, Gr. E - G T3C (160°C)	-20 ... +60	Flying leads length 460 mm	8	1	3722
	–	5,9	–	26	4x	Cl. I, Div. 1, Gr. A - D Cl. II/III, Div. 1, Gr. E - G T3C (160°C)	-20 ... +60	Flying leads length 460 mm	8	5	3723

Standard voltages (±10%) 24 V d.c., 230 V a.c., other voltages on request. Design according to VDE 0580, EN 50014/50028. 100% duty cycle.
*1) Connector/cable gland is not scope of delivery, see table »Accessories«
Attention: The protection class for coil series 46xx and 48xx is determined by the choice of cable gland.
Example: if an ATEX-certified cable gland is used that has Ex d type of protection, the solenoid will have the protection class Ex db mb; if a cable gland with Ex e type of proteciton is used, the solenoid will have protection class Ex eb mb.

Approvals

Model	Approvals ATEX	IECEx	FM	Datasheet
029x	KEMA 02 ATEX 1347 X	IECEx DEK 13.0014X	–	en 7.1.505
321x, 381x	EC-Declaration of Conformity	–	–	en 7.1.570
372x, 382x	–	–	CSA-LR 57643-6	en 7.1.575
42xx	KEMA 98 ATEX 4452 X	IECEx KEM 09.0068X	–	en 7.1.580
46xx	PTB 02 ATEX 2085 X	IECEx PTB 11.0094X	–	en 7.1.585

Our policy is one of continued research and development. We therefore reserve the right to amend, without notice, the specifications given in this document. (2008 - 5120j) © 2024 Norgren GmbH

Solenoids group 13C, standard voltages

	Power consumption		Rated current		Protection class IP/NEMA	Ex-Protection (ATEX-Category)	Temperature Ambient/Media	Electrical connection	Drawing	Circuit diagram	Model
	24 V DC (W)	230 V AC (VA)	24 V DC (mA)	230 V AC (mA)			(°C)		No.	No.	
	12,1	–	504	–	IP65 (with connector)	–	-25 ... +60 Media: +80 max.	Connector DIN EN 175301-803, form A *1)	1	1	0200
	–	11,3	–	49	IP65 (with connector)	–	-25 ... +60 Media: +80 max.	Connector DIN EN 175301-803, form A *1)	2	6	3204
	12,1	–	504	–	IP65 (with connector)	II 3G Ex ec IIC T4 Gc II 3D Ex tc IIIB T130°C Dc	-20 ... +60	Special connector DIN EN 175301-803 Form A	1	1	3217
	–	11,3	–	49	IP65 (with connector)	II 3G Ex ec IIC T4 Gc II 3D Ex tc IIIB T120°C Dc	-20 ... +50	Special connector DIN EN 175301-803 Form A	2	6	3219
	10,7	–	446	–	IP66	II 2G Ex mb IIC T3 Gb II 2D Ex mb IIIC T155°C Db	-20 ... +40	Cable length 3 m	5	4	0290
	–	12,4	–	54	IP66	II 2G Ex mb IIC T3 Gb II 2D Ex mb IIIC T155°C Db	-20 ... +40	Cable length 3 m	5	7	0291
	8,9	–	369	–	IP66 (with cable gland)	II 2G Ex eb mb IIC T4/ T5 Gb II 2D Ex tb IIIC T130°C Db	T4: -40 ... +65 T5: -40 ... +55 -40 ... +65	M20 x 1,5 *1)	6	4	4220
	–	10,0	–	43	IP66 (with cable gland)	II 2G Ex eb mb IIC T4/ T5 Gb II 2D Ex tb IIIC T130°C Db	T4: -40 ... +65 T5: -40 ... +55 -40 ... +65	M20 x 1,5 *1)	6	7	4221
	8,9	–	369	–	IP66 (with cable gland)	II 2G Ex db mb IIC T4/T6 Gb II 2G Ex eb mb IIC T4/T6 Gb II 2D Ex tb IIIC T130°C Db	T4: -40 ... +70 T6: -40 ... +40 -40 ... +70	1/2 NPT *1)	7	20	4620
	–	10,0	–	43	IP66 (with cable gland)	II 2G Ex db mb IIC T4/T6 Gb II 2G Ex eb mb IIC T4/T6 Gb II 2D Ex tb IIIC T130°C Db	T4: -40 ... +70 T6: -40 ... +40 -40 ... +70	1/2 NPT *1)	7	21	4621
	8,9	–	369	–	IP66 (with cable gland)	II 2G Ex db mb IIC T4/T6 Gb II 2G Ex eb mb IIC T4/T6 Gb II 2D Ex tb IIIC T130°C Db	T4: -40 ... +70 T6: -40 ... +40 -40 ... +70	M20 x 1,5 *1)	7	20	4622
	–	10,0	–	43	IP66 (with cable gland)	II 2G Ex db mb IIC T4/T6 Gb II 2G Ex eb mb IIC T4/T6 Gb II 2D Ex tb IIIC T130°C Db	T4: -40 ... +70 T6: -40 ... +40 -40 ... +70	M20 x 1,5 *1)	7	21	4623
	8,9	–	369	–	4x	Cl. I, Div. 1, Gr. A - D Cl. II/III, Div. 1, Gr. E - G T3C (160°C)	-20 ... +60	Flying leads length 460 mm	8	1	3724
	–	9,5	–	41	4x	Cl. I, Div. 1, Gr. A - D Cl. II/III, Div. 1, Gr. E - G T3C (160°C)	-20 ... +60	Flying leads length 460 mm	8	5	3725

Standard voltages (±10%) 24 V d.c., 230 V a.c., other voltages on request. Design according to VDE 0580, EN 50014/50028. 100% duty cycle.
*1) Connector/cable gland is not scope of delivery, see table »Accessories«
Attention: The protection class for coil series 46xx and 48xx is determined by the choice of cable gland.
Example: if an ATEX-certified cable gland is used that has Ex d type of protection, the solenoid will have the protection class Ex db mb; if a cable gland with Ex e type of proteciton is used, the solenoid will have protection class Ex eb mb.

Approvals

Model	Approvals ATEX	IECEx	FM	Datasheet
029x	KEMA 02 ATEX 1347 X	IECEx DEK 13.0014X	–	en 7.1.505
321x, 381x	EC-Declaration of Conformity	–	–	en 7.1.570
372x, 382x	–	–	CSA-LR 57643-6	en 7.1.575
42xx	KEMA 98 ATEX 4452 X	IECEx KEM 09.0068X	–	en 7.1.580
46xx	PTB 02 ATEX 2085 X	IECEx PTB 11.0094X	–	en 7.1.585

Our policy is one of continued research and development. We therefore reserve the right to amend, without notice, the specifications given in this document. (2008 - 5120j) © 2024 Norgren GmbH

Solenoids group 13D, standard voltages

	Power consumption		Rated current		Protection class IP/NEMA	Ex-Protection (ATEX-Category)	Temperature Ambient/Media	Electrical connection	Drawing	Circuit diagram	Model
	24 V DC	230 V AC	24 V DC	230 V AC							
	(W)	(VA)	(mA)	(mA)			(°C)		No.	No.	
	16,9	–	703	–	IP65 (with connector)	–	-25 ... +60 Media: +80 max.	Connector DIN EN 175301-803, form A *1)	3	1	0700
	–	19,5	–	75	IP65 (with connector)	–	-25 ... +60 Media: +80 max.	Connector DIN EN 175301-803, form A *1)	4	6	3703
	11,4	–	475	–	IP66 (with cable gland)	II 2G Ex eb mb IIC T4/T5 Gb II 2D Ex tb IIIC T130°C Db	T4: -40 ... +50 T5: -40 ... +40 -40 ... +50	M20 x 1,5 *1)	6	4	4230
	–	15,2	–	66	IP66 (with cable gland)	II 2G Ex eb mb IIC T4/T5 Gb II 2D Ex tb IIIC T130°C Db	T4: -40 ... +50 T5: -40 ... +40 -40 ... +50	M20 x 1,5 *1)	6	7	4231
	11,4	–	475	–	IP66 (with cable gland)	II 2G Ex db mb IIC T4/T5 Gb II 2G Ex eb mb IIC T4/T5 Gb II 2D Ex tb IIIC T130°C Db	T4: -40 ... +50 T5: -40 ... +40 -40 ... +50	1/2 NPT *1)	7	20	4630
	–	15,2	–	66	IP66 (with cable gland)	II 2G Ex db mb IIC T4/T5 Gb II 2G Ex eb mb IIC T4/T5 Gb II 2D Ex tb IIIC T130°C Db	T4: -40 ... +50 T5: -40 ... +40 -40 ... +50	1/2 NPT *1)	7	21	4631
	11,4	–	475	–	IP66 (with cable gland)	II 2G Ex db mb IIC T4/T5 Gb II 2G Ex eb mb IIC T4/T5 Gb II 2D Ex tb IIIC T130°C Db	T4: -40 ... +50 T5: -40 ... +40 -40 ... +50	M20 x 1,5 *1)	7	20	4632
	–	15,2	–	66	IP66 (with cable gland)	II 2G Ex db mb IIC T4/T5 Gb II 2G Ex eb mb IIC T4/T5 Gb II 2D Ex tb IIIC T130°C Db	T4: -40 ... +50 T5: -40 ... +40 -40 ... +50	M20 x 1,5 *1)	7	21	4633
	13,6	–	567	–	4x	Cl. I, Div. 1, Gr. A - D Cl. II/III, Div. 1, Gr. E - G T3C (160°C)	-20 ... +60	Flying leads length 460 mm	8	1	3726
	–	15,7	–	68	4x	Cl. I, Div. 1, Gr. A - D Cl. II/III, Div. 1, Gr. E - G T3C (160°C)	-20 ... +60	Flying leads length 460 mm	8	5	3727

Standard voltages (±10%) 24 V d.c., 230 V a.c., other voltages on request. Design according to VDE 0580, EN 50014/50028. 100% duty cycle.
*1) Connector/cable gland is not scope of delivery, see table »Accessories«
Attention: The protection class for coil series 46xx and 48xx is determined by the choice of cable gland.
Example: if an ATEX-certified cable gland is used that has Ex d type of protection, the solenoid will have the protection class Ex db mb; if a cable gland with Ex e type of proteciton is used, the solenoid will have protection class Ex eb mb.

Approvals

Model	Approvals ATEX	IECEx	FM	Datasheet
321x, 381x	EC-Declaration of Conformity	–	–	en 7.1.570
372x, 382x	–	–	CSA-LR 57643-6	en 7.1.575
42xx	KEMA 98 ATEX 4452 X	IECEx KEM 09.0068X	–	en 7.1.580
46xx	PTB 02 ATEX 2085 X	IECEx PTB 11.0094X	–	en 7.1.585

Our policy is one of continued research and development. We therefore reserve the right to amend, without notice, the specifications given in this document. (2008 - 5120j) © 2024 Norgren GmbH

Solenoids group 16D, standard voltages

	Power consumption		Rated current		Protection class IP/NEMA	Ex-Protection (ATEX-Category)	Temperature Ambient/ Media	Electrical connection	Drawing	Circuit diagram	Model
	24 V DC	230 V AC	24 V DC	230 V AC							
	(W)	(VA)	(mA)	(mA)			(°C)		No.	No.	
	16,9	–	703	–	IP65 (with connector)	–	-25 ... +60 Media: +80 max.	Connector DIN EN 175301-803, form A *1)	3	1	0800
	–	17,3	–	75	IP65 (with connector)	–	-25 ... +60 Media: +80 max.	Connector DIN EN 175301-803, form A *1)	4	6	3803
	16,9	–	703	–	IP65 (with connector)	II 3G Ex ec IIC T4 Gc II 3D Ex tc IIIB T130°C Dc	-20 ... +55	Special connector DIN EN 175301-803 Form A	3	1	3817
	–	17,3	–	75	IP65 (with connector)	II 3G Ex ec IIC T4 Gc II 3D Ex tc IIIB T130°C Dc	-20 ... +45	Special connector DIN EN 175301-803 Form A	4	6	3819
	11,4	–	475	–	IP66 (with cable gland)	II 2G Ex eb mb IIC T4/ T5 Gb II 2D Ex tb IIIC T130°C Db	T4: -40 ... +50 T5: -40 ... +40 -40 ... +50	M20 x 1,5 *1)	6	4	4280
	–	15,2	–	66	IP66 (with cable gland)	II 2G Ex eb mb IIC T4/ T5 Gb II 2D Ex tb IIIC T130°C Db	T4: -40 ... +50 T5: -40 ... +40 -40 ... +50	M20 x 1,5 *1)	6	7	4281
	11,4	–	475	–	IP66 (with cable gland)	II 2G Ex db mb IIC T4/ T5 Gb II 2G Ex eb mb IIC T4/ T5 Gb II 2D Ex tb IIIC T130°C Db	T4: -40 ... +50 T5: -40 ... +40 -40 ... +50	1/2 NPT *1)	7	20	4680
	–	15,2	–	66	IP66 (with cable gland)	II 2G Ex db mb IIC T4/ T5 Gb II 2G Ex eb mb IIC T4/ T5 Gb II 2D Ex tb IIIC T130°C Db	T4: -40 ... +50 T5: -40 ... +40 -40 ... +50	1/2 NPT *1)	7	21	4681
	11,4	–	475	–	IP66 (with cable gland)	II 2G Ex db mb IIC T4/ T5 Gb II 2G Ex eb mb IIC T4/ T5 Gb II 2D Ex tb IIIC T130°C Db	T4: -40 ... +50 T5: -40 ... +40 -40 ... +50	M20 x 1,5 *1)	7	20	4682
	–-	15,2	–	66	IP66 (with cable gland)	II 2G Ex db mb IIC T4/ T5 Gb II 2G Ex eb mb IIC T4/ T5 Gb II 2D Ex tb IIIC T130°C Db	T4: -40 ... +50 T5: -40 ... +40 -40 ... +50	M20 x 1,5 *1)	7	21	4683
	13,6	–	567	–	4x	Cl. I, Div. 1, Gr. A - D Cl. II/III, Div. 1, Gr. E - G T3C (160°C)	-20 ... +60	Flying leads length 460 mm	8	1	3826
	–	15,7	–	68	4x	Cl. I, Div. 1, Gr. A - D Cl. II/III, Div. 1, Gr. E - G T3C (160°C)	-20 ... +60	Flying leads length 460 mm	8	5	3827

Standard voltages (±10%) 24 V d.c., 230 V a.c., other voltages on request. Design according to VDE 0580, EN 50014/50028. 100% duty cycle.
*1) Connector/cable gland is not scope of delivery, see table »Accessories«
Attention: The protection class for coil series 46xx and 48xx is determined by the choice of cable gland.
Example: if an ATEX-certified cable gland is used that has Ex d type of protection, the solenoid will have the protection class Ex db mb; if a cable gland with Ex e type of proteciton is used, the solenoid will have protection class Ex eb mb.

Approvals

Model	Approvals ATEX	IECEx	FM	Datasheet
372x, 382x	–	–	CSA-LR 57643-6	en 7.1.575
42xx	KEMA 98 ATEX 4452 X	IECEx KEM 09.0068X	–	en 7.1.580
46xx	PTB 02 ATEX 2085 X	IECEx PTB 11.0094X	–	en 7.1.585

Our policy is one of continued research and development. We therefore reserve the right to amend, without notice, the specifications given in this document. (2008 - 5120j) © 2024 Norgren GmbH

Partnumbers for international approval

Land/Approval	Coil/Code	029x	321x/381x	372x/382x	42xx	46xx	48xx
Europa/ATEX	Standard	x	x	–	x	x	x
International/IECEx	Standard	x	-	–	x	x	x
China/NEPSI	-01	–	–	–	x	x	x
Brasilien/INMETRO	-02	–	–	–	x	x	–
Korea/KOSHA (only gas approval)*	-03	–	–	–	x	x	x
Indien/CCOE	Standard	–	–	–	x	x	–
Taiwan/ITRI	-05	x	–	–	x	x	x
USA/FM	Standard	–	–	x	–	–	–
Kanada/CSA	Standard	–	–	x	–	–	–

Example: 0000000427002400-01
(Coil: 4270; Voltage: 24V DC; Approval: China)
* Approval for Korea/KOSHA is currently in progress; for further information, please contact our technical service.

Accessories
Electrical connection

Cable gland
Protection class Ex e, Ex d (ATEX),
Nickel plated brass/
Stainless steel



Page 10

For sole-noid	Thread	Cable Ø (mm)	Material	Protection class (ATEX)	Ambient temperatur limitation *1)	Model
42xx	M20 x 1,5	7,0 ... 12,0	Plastic	II 2G Ex e / II 2D Ex t	See table	0589735
42xx	M20 x 1,5	10,0 ... 14,0	Plastic	II 2G Ex e / II 2D Ex t	See table	0589736
42xx	M20 x 1,5	6,0 ... 12,0	Plastic	II 2G Ex eb / II 2D Ex tb	See table	0589737
42xx	M20 x 1,5	5,0 ... 10,0	Plastic	II 2G Ex e / II 2D Ex t	See table	0589739
46xx	M20 x 1,5	5,0 ... 14,0	Nickel plated brass	II 2G Ex e / II 2D Ex t	-	0589654
46xx	M20 x 1,5	10,0 ... 14,0	Nickel plated brass	II 2G Ex d / II 2D Ex t	-	0588851
46xx	1/2 NPT	7,5 ... 11,9	Nickel plated brass	II 2G Ex d / II 2D Ex t	-	0588925
46xx, 48xx	M20 x 1,5	7,0 ... 12,0	Stainless steel 1.4404	II 2G Ex d / II 2D Ex t	-	0589395
46xx, 48xx	M20 x 1,5	10,0 ... 14,0	Stainless steel 1.4404	II 2G Ex d / II 2D Ex t	-	0589387

*1) The limitation of the temperature range to the mentioned range is due to the self-heating of the solenoid.

For solenoid	Ambient temperatur limitation solenoid 42xx		
	0589735 & 0589736 *2)	0589737	0589739 *2)
421x/426x	T4 & Dust Ex: -35°C ... + 80°C T6: -35°C ... + 55°C	T4 & Dust Ex: -40°C...+ 65°C T6: -40°C...+ 55°C	T4 & Dust Ex: -40...+78°C T6: -40...+55°C
422x/427x	T4 & Dust Ex: -35°C +65°C T5: -35°C + 55°C	T4 & Dust Ex: -40°C...+ 62°C T5: -40°C + 55°C	T4 & Dust Ex: -40...+65°C T5: -40...+55°C
423x/428x	T4 & Dust Ex: -35°C...+50°C T5: -35°C...+40°C	T4 & Dust Ex: -40°C...+50°C T5: -40°C...+40°C	T4 & Dust Ex: -40...+50°C T5: -40...+40°C

*2) Tested for the lower level of mechanical risk (4 joule), an additional protection against impacts might be needed.

Connector
DIN EN 175301-803



0570275 (form A)

Our policy is one of continued research and development. We therefore reserve the right to amend, without notice, the specifications given in this document. (2008 - 5120j) © 2024 Norgren GmbH

Dimensions in mm
Projection/First angle

1

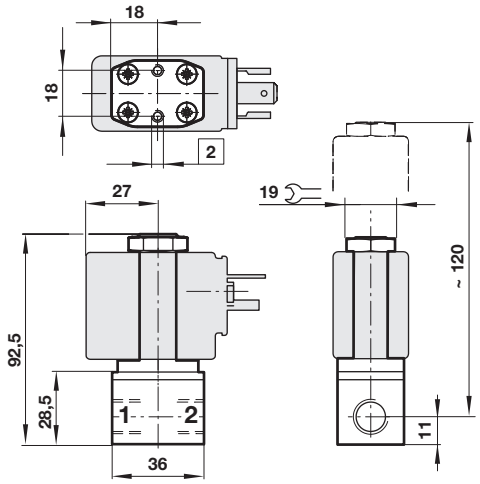

2

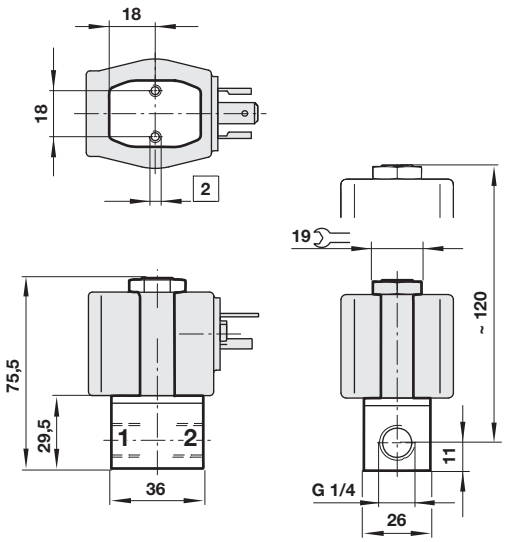

Drawings - Valve

3

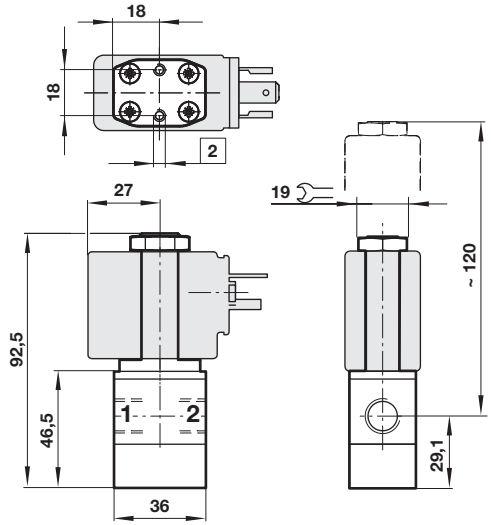

4

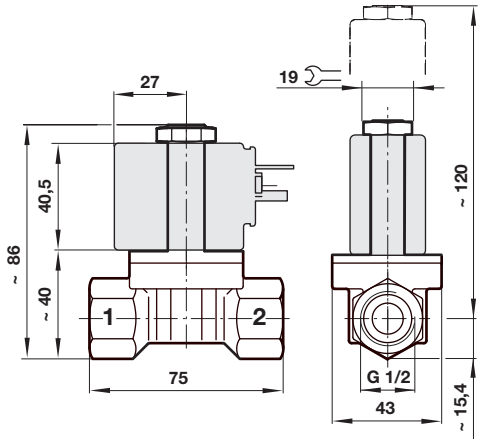

2 M4 x 6 mm deep

Our policy is one of continued research and development. We therefore reserve the right to amend, without notice, the specifications given in this document. (2008 - 5120j) © 2024 Norgren GmbH

Drawings - Solenoid

Dimensions in mm
Projection/First angle

1 Weight: 0,15 kg

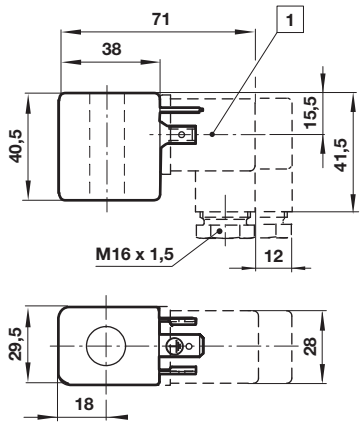

2 Weight: 0,16 kg

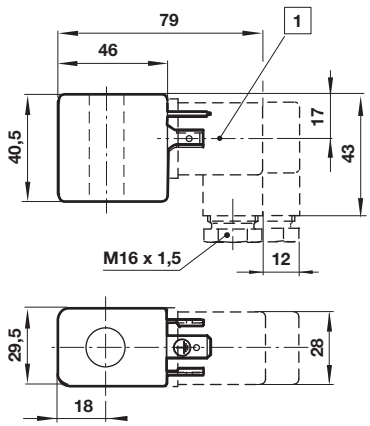

3 Weight: 0,27 kg

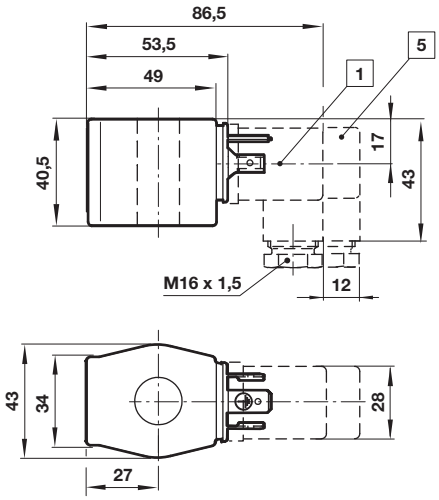

4 Weight: 0,32 kg

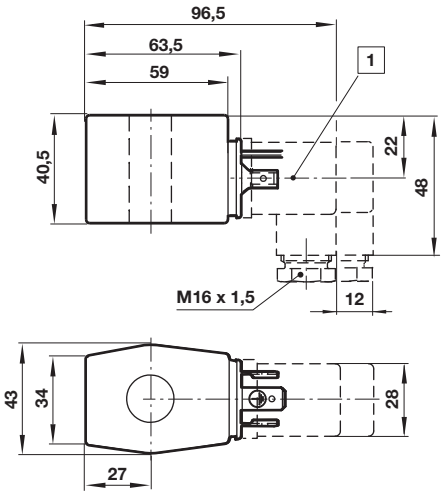

5 Weight: 0,5 kg

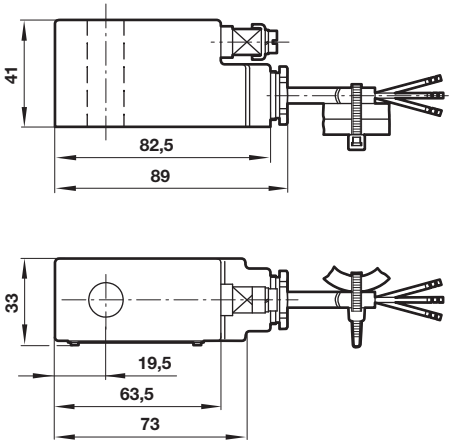

6 Weight: 0,4 kg

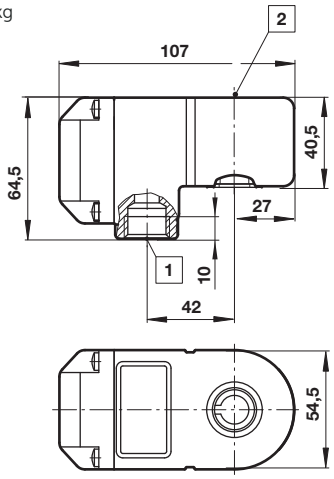

1 Connector can be indexed by 4 x 90°
2 ø 16 or 13 (with spacer tube)

Our policy is one of continued research and development. We therefore reserve the right to amend, without notice, the specifications given in this document. (2008 - 5120j) © 2024 Norgren GmbH

Dimensions in mm
Projection/First angle

7 Weight: 0,85 kg

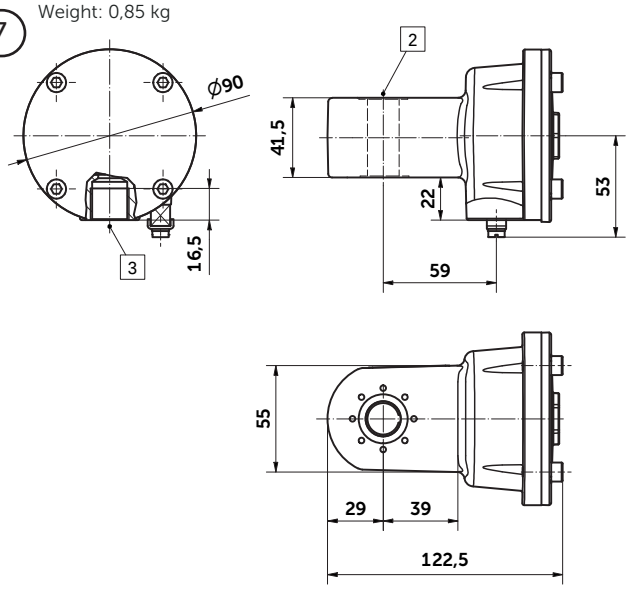

8 Weight: 0,5 kg

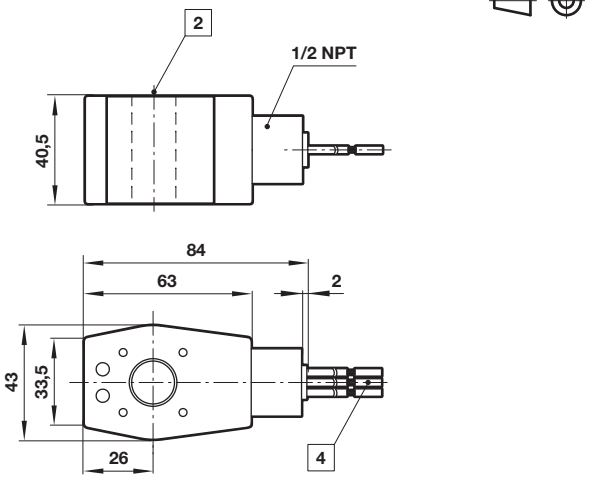

2 ø 16 or 13 (with spacer tube)
3 M20 x 1,5 or 1/2 NPT
4 Flying leads AWG 18 (460 mm long)

Circuit diagrams

1

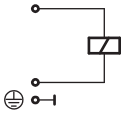

4

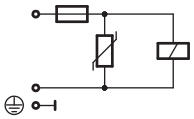

5

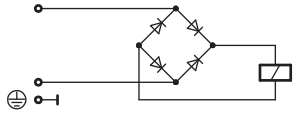

6

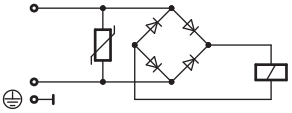

7

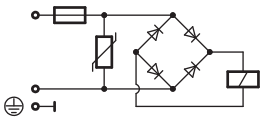

20

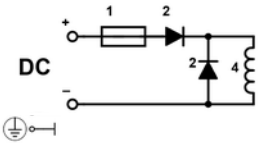

21

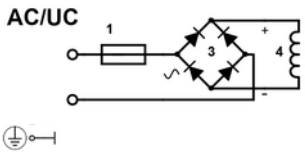

Cable gland

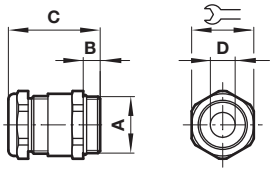

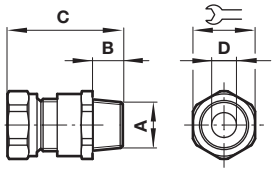

0588925 only

A	B	C	ø D		Model
M20 x 1,5	10	40	7,0 ... 12,0	24	0589735
M20 x 1,5	10	43	10,0 ... 14,0	27	0589736
M20 x 1,5	10	47,8	6,0 ... 12,0	24	0589737
M20 x 1,5	10	39,5	5,0 ... 10,0	24	0589739
M20 x 1,5	6,5	35,5	5,0 ...14,0	24	0589654
M20 x 1,5	12	37	9,0 ... 14,0	30	0588851
1/2 NPT	15	58	7,5 ... 11,9	24	0588925
M20 x 1,5	16	40	7,0 ... 12,0	24	0589395
M20 x 1,5	16	41	10,0 ... 14,0	24	0589387

Warning

These products are intended for use in industrial compressed air systems only. Do not use these products where pressures and temperatures can exceed those listed under »**Technical features/ data**«.
Before using these products with fluids other than those specified, for non-industrial applications, life-support systems or other applications not within published specifications, consult Norgren.

Through misuse, age, or malfunction, components used in fluid power systems can fail in various modes.

The system designer is warned to consider the failure modes of all component parts used in fluid power systems and to provide adequate safeguards to prevent personal injury or damage to equipment in the event of such failure.
System designers must provide a warning to end users in the system instructional manual if protection against a failure mode cannot be adequately provided.
System designers and end users are cautioned to review specific warnings found in instruction sheets packed and shipped with these products.

Our policy is one of continued research and development. We therefore reserve the right to amend, without notice, the specifications given in this document. (2008 - 5120j) © 2024 Norgren GmbH